XL, BW, BRW-2

4921250084-A

Illuminated indicators

Data sheet

DEIF Marine Instruments

1. Technology

1.1 Housing 3
1.2 Interface 3
1.3 Illumination 3
1.4 Pointer deflection 3
1.5 Error functions 4

2. Product configuration

2.1 Scale design 6
2.1.1 Standard scale designs 6
2.1.2 Custom scale designs 7

3. Technical specifications

4. Dimensions

4.1 XL dimensions 11
4.1.1 Panel-mounted XL with rear-mounted screws 11
4.1.2 Panel-mounted XL with front-mounted screws 12
4.2 BW dimensions 13
4.2.1 Bracket-mounted BW 13
4.3 BRW-2 dimensions 14
4.3.1 Surface-mounted BRW-2 14

5. Order specification

5.1 Ordering specification 15
5.2 Order specification example 15

6. Legal information

7. End-of-life

8. Appendix: Pointer positions based on input

8.1 Standard analogue indicators 19
8.2 Rudder indicators 19
8.3 Standard azimuth indicators 20
8.4 Analogue SIN/COS azimuth indicators 21

1. Technology

DEIF's illuminated indicators use patented x-coil technology that give you:

- Class 0.5 accuracy
- Direct pointer illumination
- Improved shock resistance
- 360° pointer movement

The XL/BW/BRW-2 indicators must be connected to an external power supply.

1.1 Housing

Indicators with a black background are suited for indoor use. Indicators with white backgrounds suit outdoor use. They give better contrast and resist fading over time.

Panel indicators (XL)

The XL type is designed for panel mounting in standard cutout DIN holes. IP66 protection is available.

Bridge wing indicators (BW and BRW-2)

These indicators are designed with an outside enclosure and a built-in dimmer for bridge wing mounting. IP66 protection is standard.

1.2 Interface

The indicators have analogue, sCAN and Dual CANopen interfaces.

Analogue interface

The analogue interface supports both single and dual analogue signals. This enables the indicators to replace a number of existing products. For example, all standard analogue ranges and special SIN/COS indicators.

sCAN interface

A single line CANbus for direct connection of indicators to a CAN transmitter.

Dual CANopen interface

CANopen interface with full redundancy from two galvanically separated CAN lines.

Detailed CAN information is available on www.deif.com (CAN specification), and an EDS file is available from the software download section.

1.3 Illumination

Indicators with black backgrounds use separate yellow LEDs for direct pointer illumination. The scale is illuminated with white LEDs that are placed behind the scale.

Indicators with white backgrounds use a black shadow pointer.

A rotating disc with illuminated symbols is available as an option.

1.4 Pointer deflection

The pointer can move 360° (endlessly). Standard pointer movement is clockwise. Counter-clockwise movement is optional.

The pointer position is random until the auxiliary power supply is connected.

1.5 Error functions

The indicators display warnings with a warning LED or special positioning of the pointer.

Warning LED

The amber coloured warning LED is triangular and located in the lower right corner of the scale. On XL72, it is located in the lower left corner.

Pointer indication

360° pointer rotation is possible. Therefore, the unused scale part (typically the 240° to 0° area) is used as an error indication field. The pointer moves to this position if:

- The analogue signal is out of range.
- The CAN signal is missing.

More information
See the User manual for how the error functionality works.

2. Product configuration

The tables show available options for DEIF's illuminated indicators.

Housing options

Type	Size	Notes
Panel-mounted	XL72	IP52 protection is standard, but all units can be ordered with IP 66 protection.
	XL96	
	XL144	
	XL192	
Bridge wing bracket-mounted	BW144	IP66 protection is standard.
	BW192	
Bridge wing surface-mounted	BRW-2	IP66 protection is standard. The unit can be ordered without an internal dimmer.

Analogue input options

Range	Load	Notes
0 V to 1 V	1 kΩ	
0 V to 10 V	10 kΩ	
-1 V to 1 V	1 kΩ	
-5 V to 5 V	10 kΩ	
-10 V to 10 V	10 kΩ	
0 mA to 1 mA	1 kΩ	
0 mA to 20 mA	50 Ω	
4 mA to 20 mA 20 mA to 4 mA	50 Ω	4 mA to 20 mA is available on the Input 1 terminal and 20 mA to 4 mA on the Input 2 terminal.
-0.5 mA to 0.5 mA	1 kΩ	
-1 mA to 1 mA	1 kΩ	
-10 mA to 10 mA	50 Ω	
-20 mA to 20 mA	50 Ω	
Customer defined		Contact DEIF for more information about limitations, MED restrictions, and design examples.

NOTE Options with analogue inputs can be Single input or Dual SIN/COS input. Single input options only use the Input 1 terminal. Dual SIN/COS inputs use the input terminal 1 for SIN inputs and the input terminal 2 for COS inputs.

NOTE Dual input cannot be used in combination with current loops. If multiple indicators are needed on the same output, use the voltage versions.

sCAN input options

Input type	Indicator type
12-bit encoder 16-bit encoder Absolute input	General (RPM, Rudder, and more) Azimuth (360°) Pitch

NOTE Contact DEIF if you require a Dual CANopen solution.

Pointer type options

Unit type	Pointer colour	Notes
Standard	Pointer colour is defined by scale design	Black scale: White pointer with yellow illumination. White scale: Black shadow without illumination.
Rotating disc*	Standard	Specify the design number from one of the standard scales in the Illuminated indicators standard scale designs document.
	Customer defined	Specify the new design.

NOTE * Rotating discs are available on XL72, XL96, XL144 and BW144 with a black scale.

Pointer position and deflection options

Pointer property	Options	Notes
Pointer position at the electrical centre of the input range	12 o'clock 3 o'clock 6 o'clock 9 o'clock Customer defined	Electrical centre of the input range examples 4 to 20 mA: 12 mA 0 to 10 V: 5 V -10 to 10 V: 0 V
Pointer deflection direction*	Standard	A positive input moves the pointer clockwise.
	Reversed	A positive input moves the pointer counter-clockwise.

NOTE * Inputs on Input 1 (4 mA to 20 mA) are always clockwise. Inputs on Input 2 (20 mA to 4 mA) are always counter-clockwise.

Scale options

Design	Notes
Standard	Specify the design number from one of the standard scales in the Illuminated indicators standard scale designs document.
Customer defined	Specify the new design.

2.1 Scale design

2.1.1 Standard scale designs

Examples of XL standard scales

More information
See Illuminated indicators standard scale designs for a complete list of standard scale designs.

2.1.2 Custom scale designs

If the standard designs do not meet your requirements, it is possible to design your own.

However, the scale design has some limitations due to product performance, automatic testing and approvals. Contact DEIF for further information and more design samples.

The MED restrictions are focusing more and more on the specific design. Keep that in mind when you make your own design.

Examples of custom scale designs

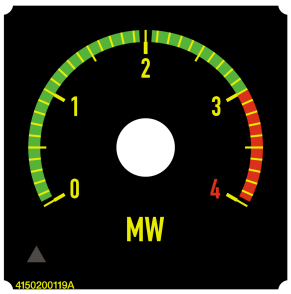

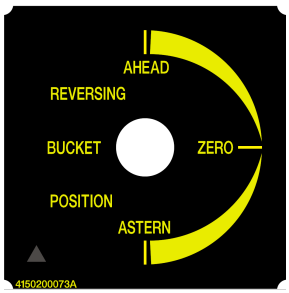

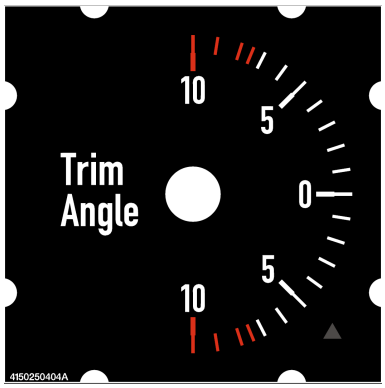

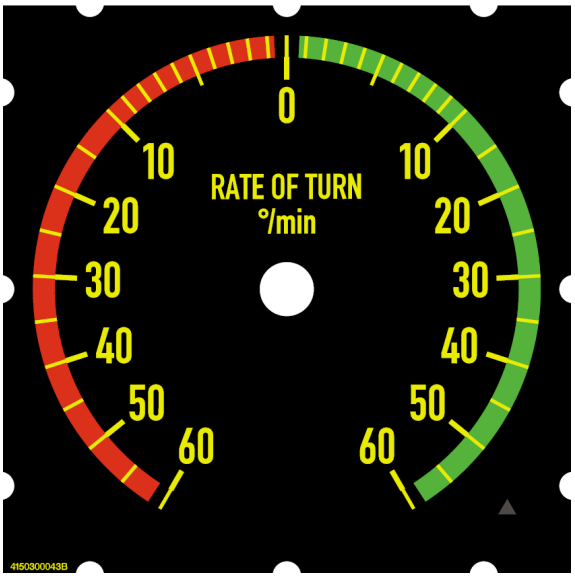

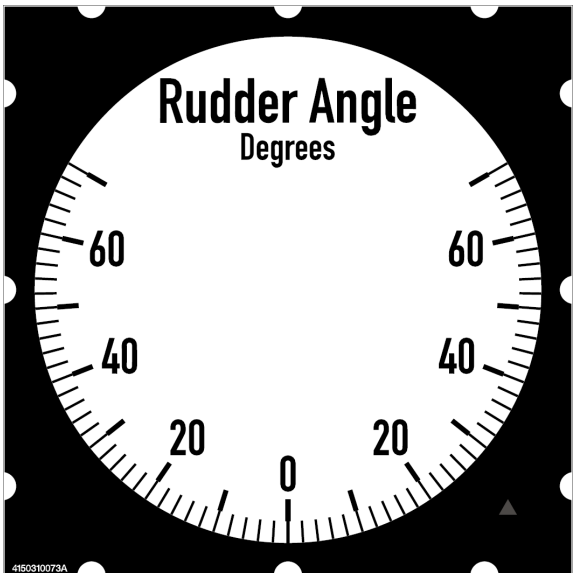

3. Technical specifications

Category	Specification		Standards	Notes
Accuracy	Class 0.5 (-10 to 15 to 30 to 55 °C) measured at 360° deflection, corresponds to ±1.8° error		IEC/EN 60051	
Response time	Maximum pointer speed is 90° per second			To prevent overshoot, the pointer is ramped up/down during movement.
Recommended panel cutout	XL72	68.5 x 68.5 mm		XL indicators fit in a DIN 43700 cutout, but we recommend using a larger cutout for indicators with a IP66 protection.
	XL96	92.5 x 92.5 mm		
	XL144	138.5 x 138.5 mm		
	XL192	186.5 x 186.5 mm		
Scale size	XL72	57.5 x 57.5 mm		
	XL96	81.5 x 81.5 mm		
	XL144	127.0 x 127.0 mm		
	XL192	174.0 x 174.0 mm		
Weight	XL72	240 g		
	XL96	330 g		
	XL144	550 g		
	XL192	810 g		
	BW144	990 g		
	BW192	1170 g		
	BRW-2	2800 g		
Power supply	24 V DC, -25/+30% (18 to 24 to 31.2 V DC) Reverse polarity protected Minimum start-up voltage: 9.6 V DC			
Illumination supply	7 to 30 V DC (maximum 31.2 V DC)			
Connectors	Analogue and Dual CAN	Pluggable screw terminals: 0.2 to 2.5 mm^2		
	sCAN (DEIF single CAN)	Pluggable dual spring terminals: 0.2 to 2.5 mm^2		
Galvanic separation	600 V AC between the following groups			
	CAN	Auxiliary supply CAN 1 CAN 2		
	Analogue	Auxiliary supply Analogue inputs (common) Dimmer		
Scale base material	PMMA			
Pointer	Black scale	Transparent polycarbonate with white print and yellow illumination (588 nm)		
	White scale	Transparent polycarbonate with black print (shadow)		

Category	Specification		Standards	Notes
Window	3 mm polycarbonate with UV blocking		UL94 V0	
Disc	XL72	⌀ 31 mm		Only available with a black scale base
	XL96	⌀ 47 mm		
	XL144	⌀ 70.5 mm		
Housing	XL	ASA/PC LURAN-S (plastic)	UL94 V0	
	BW			
	BRW-2	LURAN-S, colour code: RAL 7001		
Mounting angle	0° to 150° to the horizontal without affecting the calibration		DIN 16257	
Compass safety distance	Steering compass	0.60 m	IEC/EN 60945	
	Standby/emergency compass	0.40 m		
Input ranges	Voltage	-1 to 1 V, or -30 to 30 V		See the full list of standard ranges in the Product configuration chapter.
	Current	-1 to 1 mA, or -25 to 25 mA		
	Load special inputs	1 kΩ/V on voltage input 1 V on current input		
sCAN calibration	Minimum, zero and maximum scale values can be aligned to system needs and pointer deflection changed between CW and CCW			See the User manual for details.
Analogue adjustments	On rear side	A: Gain: ±10 % B: Offset: ±10 %		
	On 360° units	A: EM selector: Clockwise = standard Counter-clockwise = 180° change		
Out of range (analogue)	When the input is 2 % (-2 to 102 % of F.S.) out of range, the pointer moves to error position			See the User manual for details.
Ingress protection	XL (standard), panel-mounted	Front: IP52 Rear: IP20	IEC/EN 60529	
	XL (option), panel-mounted	Front: IP66 Rear: IP20		
	BW, BRW-2	IP66		
Humidity	Maximum 95 % RH	Maximum of 30 days per year	DIN 40040	Class H S E, short term condensing allowed
	Maximum 85 % RH			
	Maximum 75 % RH	Average RH allowed per year		
Temperature	Operating	-25 to 70 °C	IEC/EN 60068-2-1 Cold IEC/EN 60068-2-1 Dry heat IEC/EN 60051	Influence: Maximum ±1.5 % within -15 to 55 °C
	Storage	-40 to 80 °C		
Panel influence			IEC/EN 60051	The panel material and thickness has no influence on the unit's accuracy.

Category	Specification		Standards	Notes
Panel thickness	Maximum 18 mm			For XL units that are mounted in DIN-sized cutouts
Mechanical shock test	18 x 50 g half sine (11 ms)		IEC 60068-2-27	
Vibration test	3 to 13.2 Hz	2 mm (peak-peak)	EN 60945 DNV/GL Class A	
	13.2 to 100 Hz	0.7 g		
	3 to 13.2 Hz	6 mm (peak-peak)	DNV/GL Class C	
	13.2 to 50 Hz	2.1 g		
Safety	CAT III, 300V, pollution degree 2		EN 61010-1	
Consumption (analogue)	Auxiliary supply	65 to 75 mA/24 V DC		
	Illumination supply	15 mA/24 V DC		XL72, XL96
		20 mA/24 VDC		XL144, XL192
Consumption (CAN)	100 to 130 mA at 24 V DC			Includes illumination.
EMC	CE-marked for industrial environment		EN 61000-6-V2/4 EN 60945	

4. Dimensions

4.1 XL dimensions

4.1.1 Panel-mounted XL with rear-mounted screws

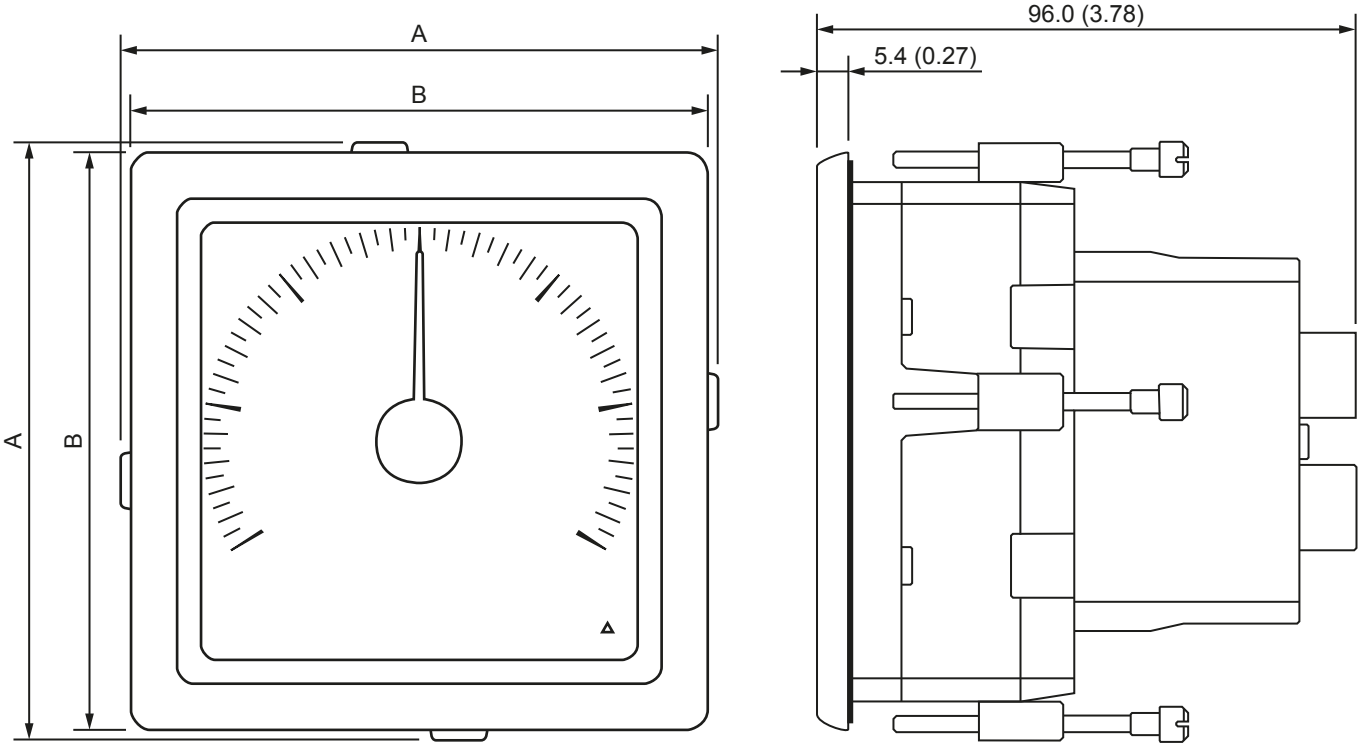

Dimensions in millimeters (inches)

Product	A	B
XL72	80.5 (3.17)	77.0 (3.03)
XL96	105.5 (4.15)	102.0 (4.02)
XL144	152.0 (5.99)	148.0 (5.83)
XL192	200.0 (7.88)	196.0 (7.72)

4.1.2 Panel-mounted XL with front-mounted screws

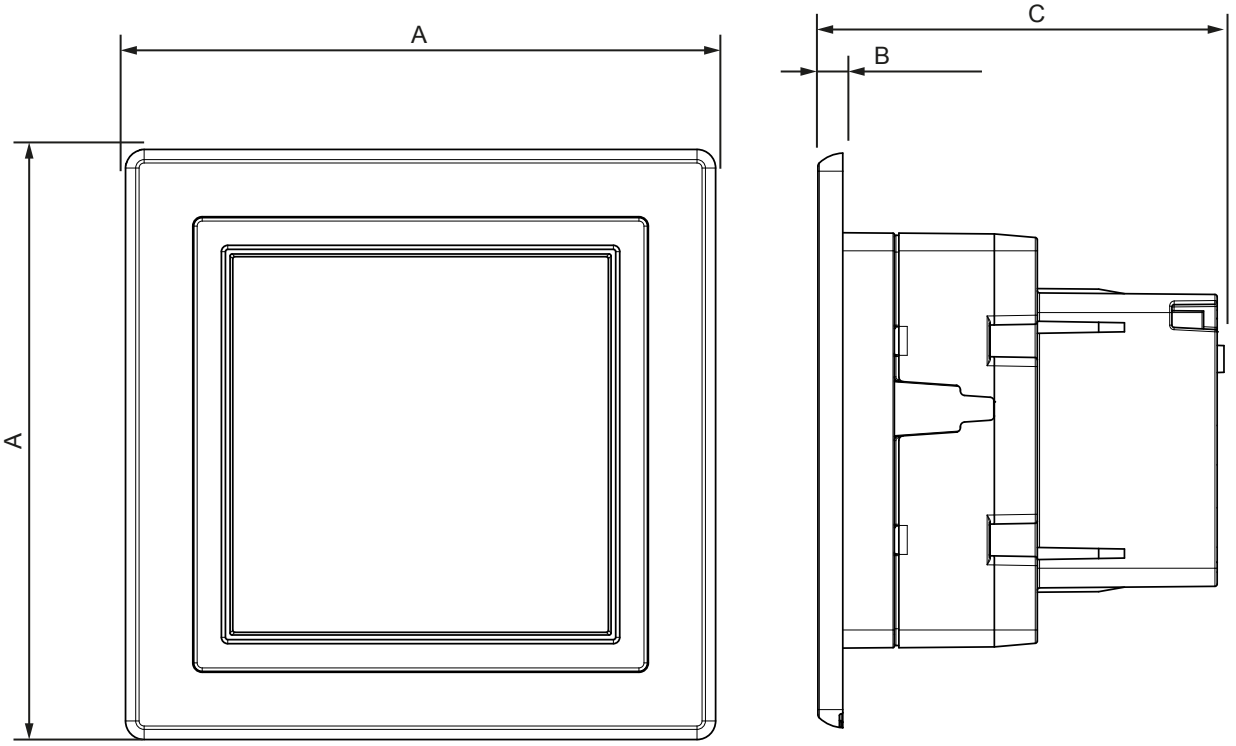

Dimensions in millimeters (inches)

Product	A	B	C
XL96	127 (5)	5.5 (0.22)	89.8 (3.54)
XL144	173 (6.81)	5.5 (0.22)	82.8 (3.26)

4.2 BW dimensions

4.2.1 Bracket-mounted BW

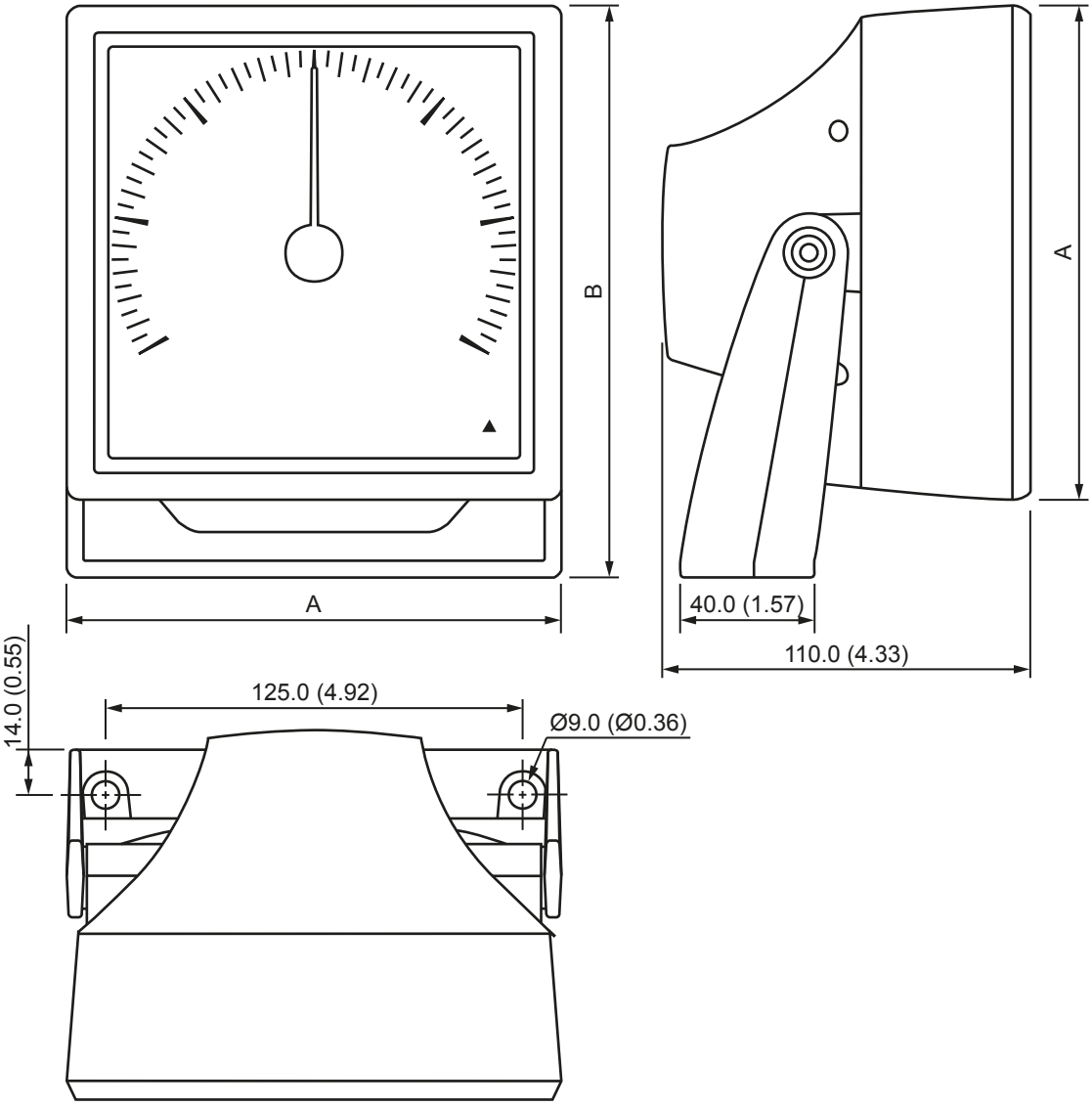

Dimensions in millimeters (inches)

Product	A	B
BW144	148.0 (5.83)	171.0 (6.73)
BW192	196.0 (7.72)	219.0 (8.62)

Cable glands

Product	Type	Cable gauge in millimeters (inches)	Amount	Placement
BW144	PG9	5.0 to 8.0 (0.20 to 0.31)	2	Rear
BW192	PG16	8.0 to 14.0 (0.31 to 0.55)	2	Rear

4.3 BRW-2 dimensions

4.3.1 Surface-mounted BRW-2

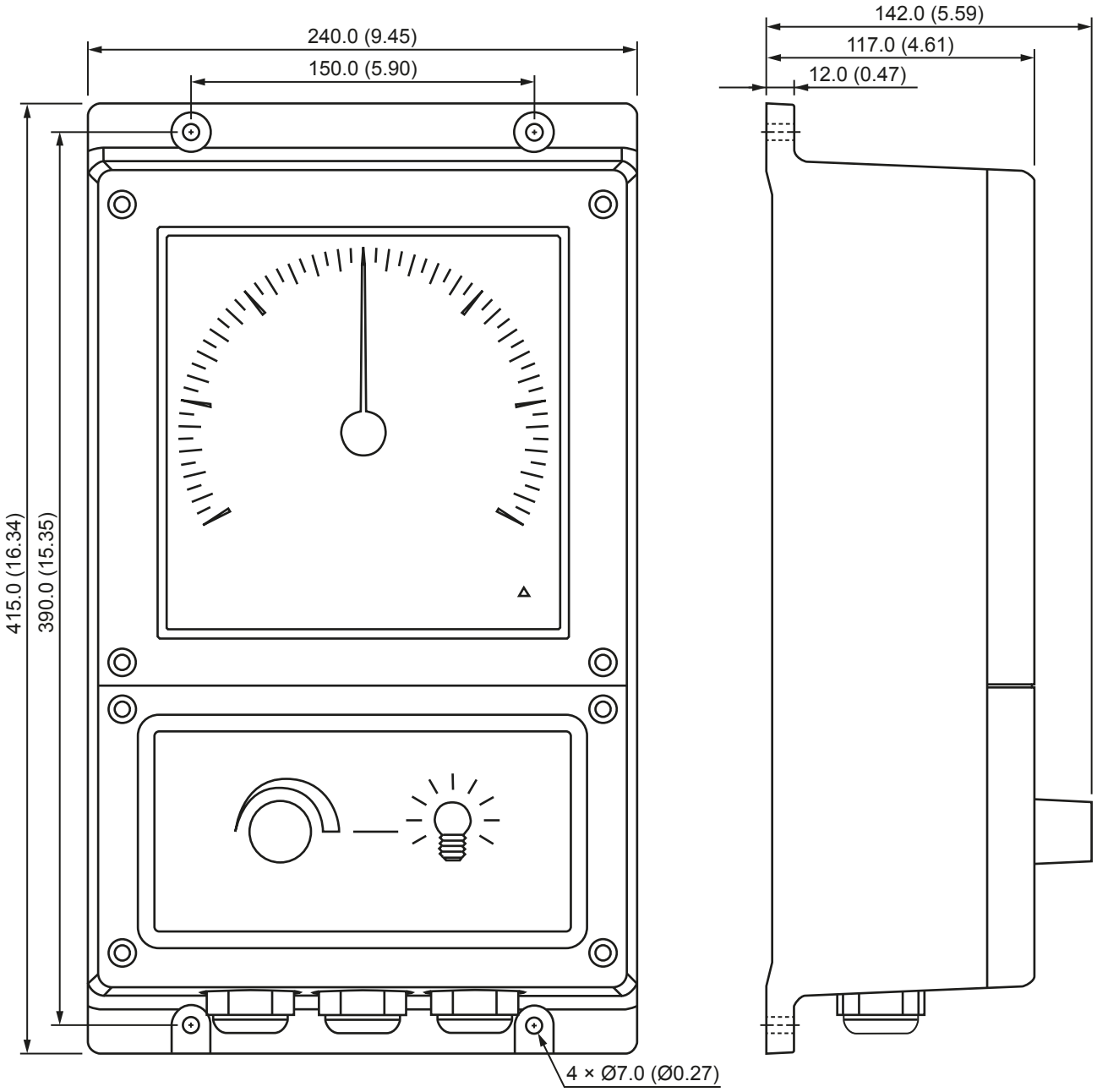

Cable glands

Product	Type	Cable gauge in millimeters (inches)	Amount	Placement
BRW-2	PG21	13.0 to 18.0 (0.51 to 0.71)	3	Bottom

If you order a BRW-2 without an internal dimmer, you can order a separate IP66 dimmer box. Alternatively, order a dimmer kit for panel mounting.

Item number	Part	Description
2951890010-01	Dimmer box	Waterproof dimmer box for indicators. 10 kΩ potentiometer in IP66 plastic box with PG13.5/PG16 cable glands.
2951890010-02	Dimmer kit	Parts for dimming, dimmer potentiometer (1 kΩ), and fittings for panel mounting.

5. Order specification

5.1 Ordering specification

More information
See Product configuration for details about the housing, input, pointer, and scale configuration parameters.

Application type					
General (RPM, rudder, and so on)	☐	Azimuth (360°)	☐	Pitch	☐

Housing				
Type and size				
Ingress protection	IP52	☐	IP66	☐

Input									
Analogue			☐	sCAN			☐	Dual CANopen*	☐
Single	☐	Dual SIN/COS	☐	12-bit	☐	16-bit	☐		
Range				Source Node ID					
				Absolute input			☐		
				Absolute minimum					
				Absolute centre					
				Absolute maximum					

NOTE * Contact DEIF to about the Dual CANopen specifications.

Pointer					
Standard	☐	Standard rotating disc	☐	Custom rotating disc	☐
Electrical centre pointer position					
Deflection direction		Standard	☐	Reversed	☐

Scale				
Standard	☐		Custom	☐
Standard scale number				

NOTE If a suitable standard design is not available, you can prepare a draft of your preferred scale design. If possible, add a reference to an existing design.

5.2 Order specification example

Example of a completed order specification for an XL96 rudder angle indicator with a black standard scale base.

Application type					
General (RPM, rudder, and so on)	☒	Azimuth (360°)	☐	Pitch	☐

Housing				
Type and size	**XL96**			
Ingress protection	IP52	☒	IP66	☐

Input									
Analogue			☒	sCAN			☐	Dual CANopen*	☐
Single	☒	Dual SIN/COS	☐	12-bit	☐	16-bit	☐		
Range	**-10 to 0 to 10 V**			Source Node ID					
				Absolute input			☐		
				Absolute minimum					
				Absolute centre					
				Absolute maximum					

Pointer					
Standard	☒	Standard rotating disc	☐	Custom rotating disc	☐
Electrical centre pointer position		**0 V**			
Deflection direction		Standard	☒	Reversed	☐

Scale				
Standard	☒		Custom	☐
Standard scale number	**4150250357**			

NOTE The analogue XL 4 to 20 mA is only available as clockwise (CW). If you need to change the pointer deflection to counterclockwise, use the terminal inputs.

6. Legal information

Previous document number

This document previously had document number 4921250057.

Disclaimer

DEIF A/S reserves the right to change any of the contents of this document without prior notice.

The English version of this document always contains the most recent and up-to-date information about the product. DEIF does not take responsibility for the accuracy of translations, and translations might not be updated at the same time as the English document. If there is a discrepancy, the English version prevails.

Copyright

© Copyright DEIF A/S. All rights reserved.

7. End-of-life

Disposal of waste electrical and electronic equipment

WEEE symbol

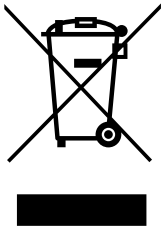

All products that are marked with the crossed-out wheeled bin (the WEEE symbol) are electrical and electronic equipment (EEE). EEE contains materials, components and substances that can be dangerous and harmful to people's health and to the environment. Waste electrical and electronic equipment (WEEE) must therefore be disposed of properly. In the EU, the disposal of WEEE is governed by the WEEE directive issued by the European Parliament. DEIF complies with this directive.

You must not dispose of WEEE as unsorted municipal waste. Instead, WEEE must be collected separately, to minimise the load on the environment, and to improve the opportunities to recycle, reuse and/or recover the WEEE. In the EU, local governments are responsible for facilities to receive WEEE. If you need more information on how to dispose of DEIF WEEE, please contact DEIF.

8. Appendix: Pointer positions based on input

8.1 Standard analogue indicators

Input type	Input 1	Input 2	Pointer position (scale)	STD design EM = 12 Pointer CW
4 to 20 mA	4 mA	-	-45	
0 to 10 V	0 V	-		
-10 to 0 to 10 V	-10 V	-		
4 to 20 mA	12 mA	-	0	
0 to 10 V	5 V	-		
-10 to 0 to 10 V	0 V	-		
4 to 20 mA	20 mA	-	+45	
0 to 10 V	10 V	-		
-10 to 0 to 10 V	10 V	-		

8.2 Rudder indicators

When used in a system with TRI-2, XL must be CCW, or TRI-2 must be 20 to 4 mA and XL CW.

XL 4 to 20 mA can be changed from CW to CCW by the customer. RT-2 can also be changed from CW to CCW during installation.

Input type	Input 1	Input 2	Pointer position (scale)	FWD design EM = 6 Pointer CCW1	AFT design EM = 12 Pointer CCW*
4 to 20 mA	-	4 mA	-45		
0 to 10 V	0 V	-			
-10 to 0 to 10 V	-10 V	-			
4 to 20 mA	-	12 mA	0	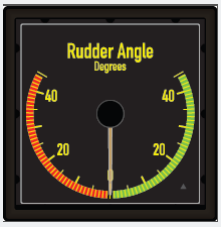	
0 to 10 V	5 V	-			
-10 to 0 to 10 V	0 V	-			

Input type	Input 1	Input 2	Pointer position (scale)	FWD design EM = 6 Pointer CCW1	AFT design EM = 12 Pointer CCW*
4 to 20 mA	-	20 mA	+45		
0 to 10 V	10 V	-			
-10 to 0 to 10 V	10 V	-			

NOTE * Make sure that the pointer rotation matches other indicators/transmitters in the system (TRI-2, RT-2, and so on).

8.3 Standard azimuth indicators

Input type	Input 1	Input 2	Pointer position (scale)	FWD design EM = 12** Pointer CW*	AFT design EM = 6** Pointer CW*
4 to 20 mA	4 mA	-	0	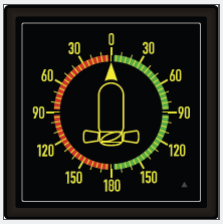	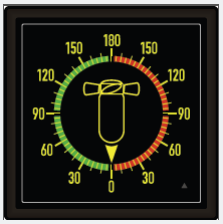
0 to 10 V	0 V	-			
-10 to 0 to 10 V	-10 V	-			
4 to 20 mA	8 mA	-	+90		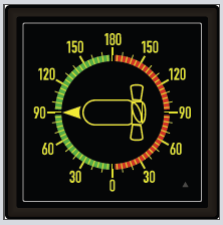
0 to 10 V	2.5 V	-			
-10 to 0 to 10 V	-5 V	-			
4 to 20 mA	12 mA	-	180		
0 to 10 V	5 V	-			
-10 to 0 to 10 V	0 V	-			
4 to 20 mA	16 mA	-	-90		
0 to 10 V	7.5 V	-			
-10 to 0 to 10 V	5 V	-			

NOTE * Make sure that the pointer rotation matches other indicators/transmitters in the system (RTA-602 and so on).
NOTE ** EM can be changed 180 ° (from 6 to 12 or 12 to 6) by turning the rear side adjustment potentiometer A.

8.4 Analogue SIN/COS azimuth indicators

Input type	Input 1	Input 2	Pointer position (scale)	FWD design EM = 12** Pointer CW*	AFT design EM = 6** Pointer CW*
4 to 20 mA	12 mA	4 mA	0 (A)	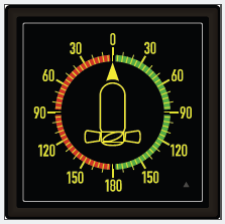	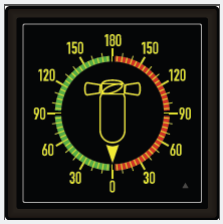
0 to 10 V	5 V	0 V			
-10 to 0 to 10 V	0 V	-10 V			
4 to 20 mA	4 mA	12 mA	+90 (B)		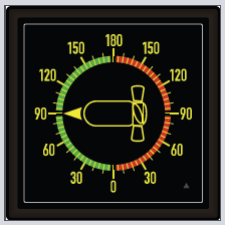
0 to 10 V	0 V	5 V			
-10 to 0 to 10 V	-10 V	0 V			
4 to 20 mA	12 mA	20 mA	180 (C)		
0 to 10 V	5 V	10 V			
-10 to 0 to 10 V	0 V	10 V			
4 to 20 mA	20 mA	12 mA	-90 (D)		
0 to 10 V	10 V	5 V			
-10 to 0 to 10 V	10 V	0 V			

NOTE * Make sure that the pointer rotation matches other indicators/transmitters in the system (RTA-602 and so on).
NOTE ** EM can be changed 180 ° (from 6 to 12 or 12 to 6) by turning the rear side adjustment potentiometer A.
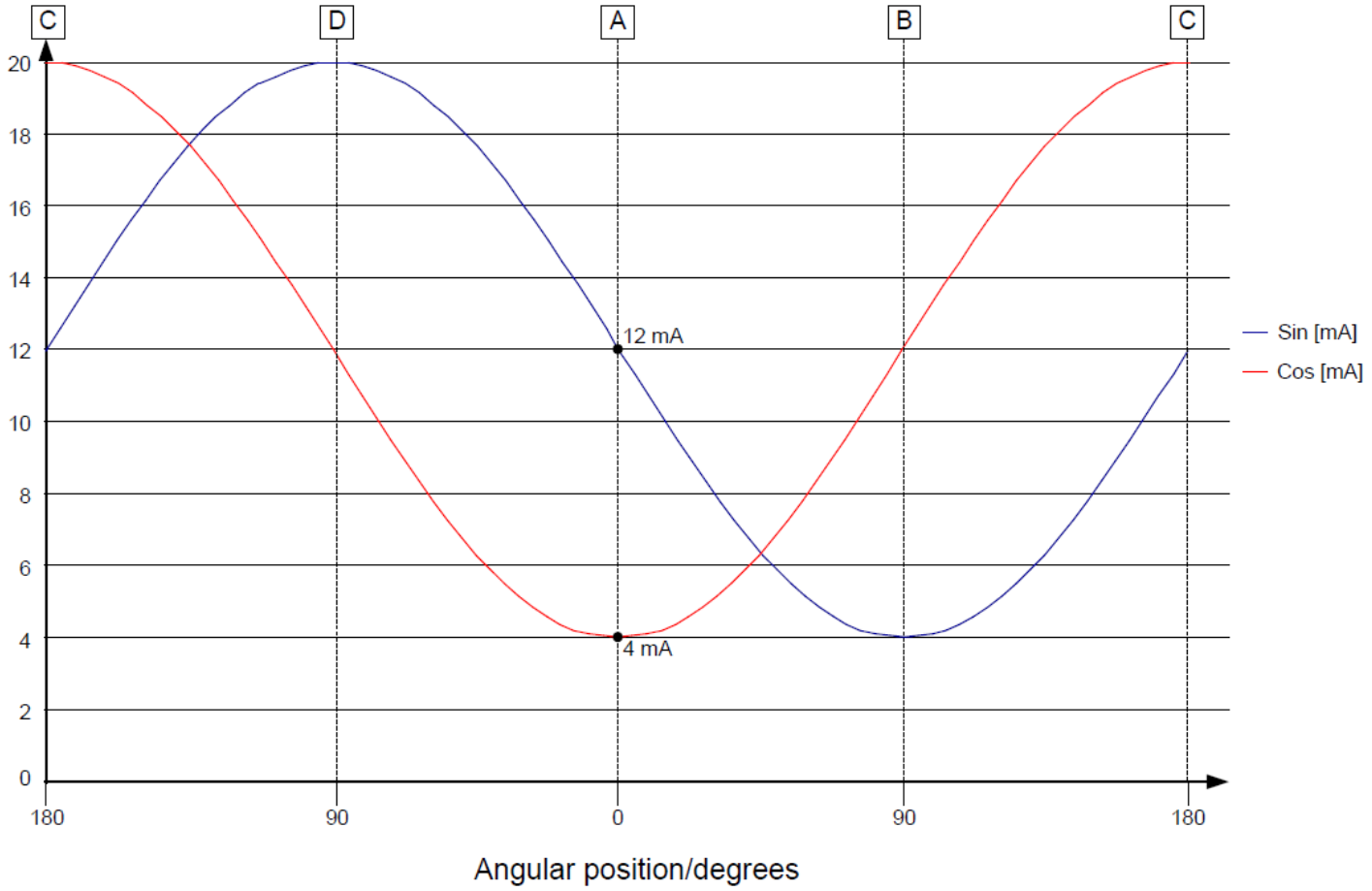
Steering Angle Feedback signals