XL, BW, BRW-2

4189350024-R

Illuminated indicators

User manual

DEIF Marine Instruments

1. Overview

1.1 Legal information and safety 4
1.1.1 Third party equipment 4
1.1.2 Disclaimer 4
1.1.3 Copyright 4
1.1.4 Electrostatic discharge 4
1.2 Package contents 4

2. XL wiring and installation

2.1 Wiring 6
2.1.1 Analogue input indicators 6
2.1.2 Rudder potentiometer analogue indicator 9
2.1.3 Dimmer setup for analogue indicators 9
2.1.4 Dual CANopen indicators 11
2.1.5 Dimmer setup for dual CANopen indicators 12
2.1.6 sCAN input indicators 13
2.1.7 Dimmer setup for sCAN indicators 15
2.2 Dimensions and panel cutout 17
2.2.1 Panel-mounted XL with rear-mounted screws 17
2.2.2 Panel-mounted XL with front-mounted screws 18
2.2.3 XL panel cutout 18
2.3 Mounting XL indicators 19

3. BW wiring and installation

3.1 Wiring 20
3.1.1 Dimmer wiring 20
3.1.2 Cable glands 20
3.2 Dimensions and drilling template 21
3.2.1 Bracket-mounted BW 21
3.2.2 Drilling template 22
3.3 Mounting BW indicators 22

4. BRW-2 wiring and installation

4.1 Wiring 23
4.1.1 Overview 23
4.1.2 Analogue input terminal overview 24
4.1.3 CANopen input terminal connections 25
4.1.4 Dimmer wiring 26
4.2 Dimensions and drilling template 27
4.2.1 Surface-mounted BRW-2 27
4.2.2 Drilling template 28
4.3 BRW-2 replacement for BRW-1 28
4.4 Replacement of XL192 indicator in BRW-2 29
4.4.1 Replacement instructions 29
4.4.2 Adjustment help for analogue input indicators 29

5. Commissioning

5.1 Commissioning preparation 31
5.2 Commissioning analogue indicators 31
5.2.1 Special 4 to 20 mA functionality 31
5.2.2 Adjustment of single analogue input indicators 31
5.2.3 Adjustment functionality 32

5.2.4 Out of range definition ... 32
5.3 Commissioning sCAN indicators ... 32
5.3.1 Start setup mode ... 33
5.3.2 Synchronise XL indicators over CAN ... 33
5.3.3 Replacing indicators in a calibrated system ... 33
5.3.4 Setup indicators without 360 ° scales ... 33
5.3.5 Setup indicators with 360 ° scales ... 35
5.4 Commissioning single and dual CANopen indicators ... 35
5.4.1 Termination of the CANopen line ... 36
5.5 Error handling ... 37
5.5.1 Analogue 240 ° indicators ... 37
5.5.2 Analogue 360 ° indicators ... 37
5.5.3 CAN 240 ° indicators ... 37
5.5.4 CAN 360 ° indicators ... 38

6. Appendix A: Pointer position examples

7. Appendix B: Pointer positions based on input

7.1 Standard analogue indicators ... 40
7.2 Rudder indicators ... 40
7.3 Standard azimuth indicators ... 41
7.4 Analogue SIN/COS azimuth indicators ... 42

1. Overview

This document contains guidelines for mounting, connecting, and commissioning the XL or BW/BRW-2 indicators. Wiring diagrams and mounting instructions for each indicator group are documented in separate chapters. The commissioning chapter contains commissioning instructions for all indicator groups based on the input type for the indicator.

1.1 Legal information and safety

1.1.1 Third party equipment

DEIF takes no responsibility for the installation or operation of any third party equipment.

1.1.2 Disclaimer

DEIF A/S reserves the right to change any of the contents of this document without prior notice.

The English version of this document always contains the most recent and up-to-date information about the product. DEIF does not take responsibility for the accuracy of translations, and translations might not be updated at the same time as the English document. If there is a discrepancy, the English version prevails.

1.1.3 Copyright

© Copyright DEIF A/S. All rights reserved.

1.1.4 Electrostatic discharge

The indicator is protected against ESD (static electricity). Therefore, no special attention to ESD is needed during the mounting and wiring of the indicator.

1.2 Package contents

The XL/BW/BRW-2 indicators are delivered in a cardboard box. To protect the indicator it is important to store it in the box until mounting.

For the XL types, the box also contains a number of fixing clamps. The exact number of clamps depends on the indicator size and the degree of IP protection.

If the indicator is mounted for IP66 protection, a blue gasket for IP66 protection will be included. The contents should be as described in the table below.

For bulkhead-mounted types (BW/BRW-2), the box also contains a bracket with two 8 x 12 mm screws. This is for fixing the bracket on the bulkhead box (5 mm Allen key).

Summary of package contents for each indicator

Content	XL72	XL96	XL144	XL192	BW144	BW192	BRW-2
Quick guide	1	1	1	1	1	1	1
Indicator	1	1	1	1	1	1	1
Terminals*	2/3	2/3	2/3	2/3	2/3	2/3	2/3
Rear-mounted version, fixing clamps IP52/IP66	2/4	2/4	4/8	4/8			
Gasket IP66 option	1	1	1	1			
Front-mounted version, frame		1	1				

Content	XL72	XL96	XL144	XL192	BW144	BW192	BRW-2
Gasket IP66 BW/BRW-2					1	1	1
Rear cover with bracket					1	1	
Screws for rear cover					8	8	
Bracket with 8 x 12 mm screws					2	2	4

NOTE * If the indicator is a CANopen input type, the box includes a 3-terminal block for illumination input. It also includes a CAN cable fixing plate.

XL with IP66 protection

When the indicator is to be mounted for IP66 protection, a blue gasket is included.

BW/BRW-2 IP66 protection

A black or blue gasket is always included.

2. XL wiring and installation

2.1 Wiring

2.1.1 Analogue input indicators

Terminal connections

Pin number	Function		Notes
1	Supply voltage	0 V	
2		24 V	
3	Analogue input	Input 1 (SIN)	Input 1 and input common* used for single input On 4 to 20 mA, input 1 is CW and input 2 CCW
4		Input common	
5		Input 2 (Cos)	
6	Illumination	Illumination +	Dimmer input. Dimmer range 7 to 30 V DC Consumption maximum 30 mA
7		Illumination GND	
8	-	NC	Not connected, can be used freely
A	Analogue adjustment	Maximum adjustment	Maximum and zero adjustment, sealed by label On 360 ° versions, A is EM selection and B is zero adjustment
B		Zero adjustment	

NOTE * Input common is mutual for input 1 and input 2.

Voltage single input

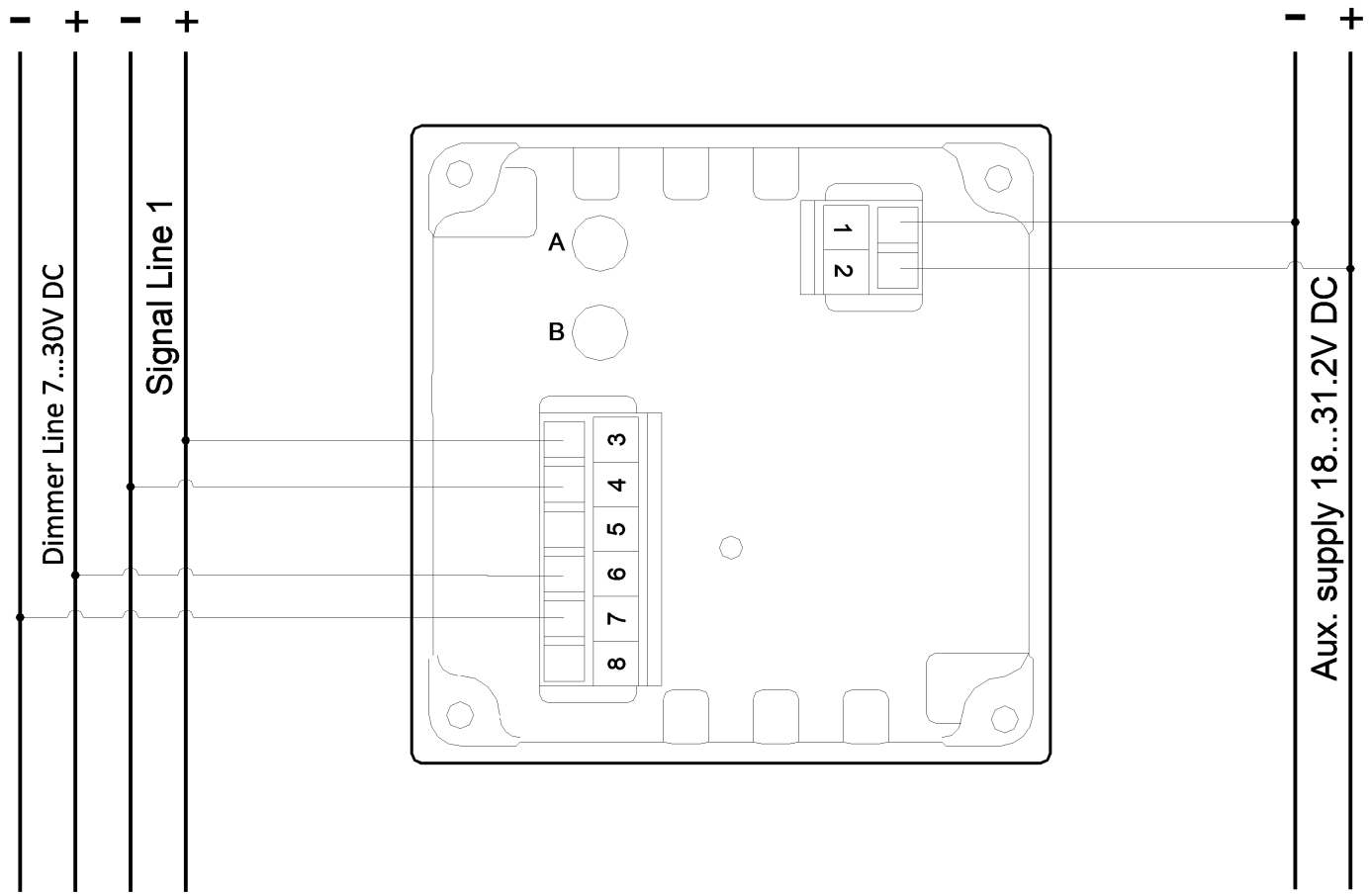

Current single input

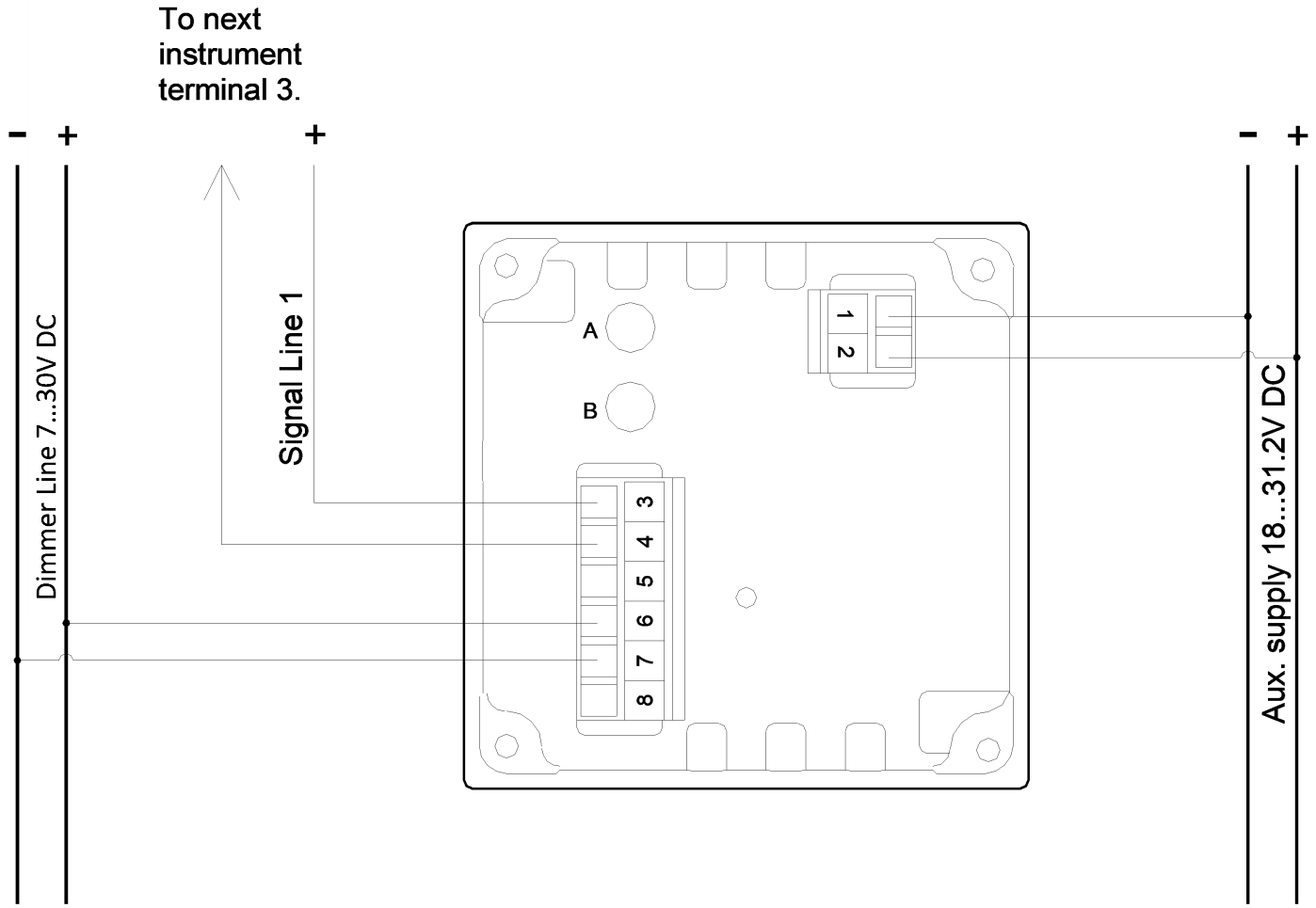

Analogue voltage dual input (SIN/COS, linear)

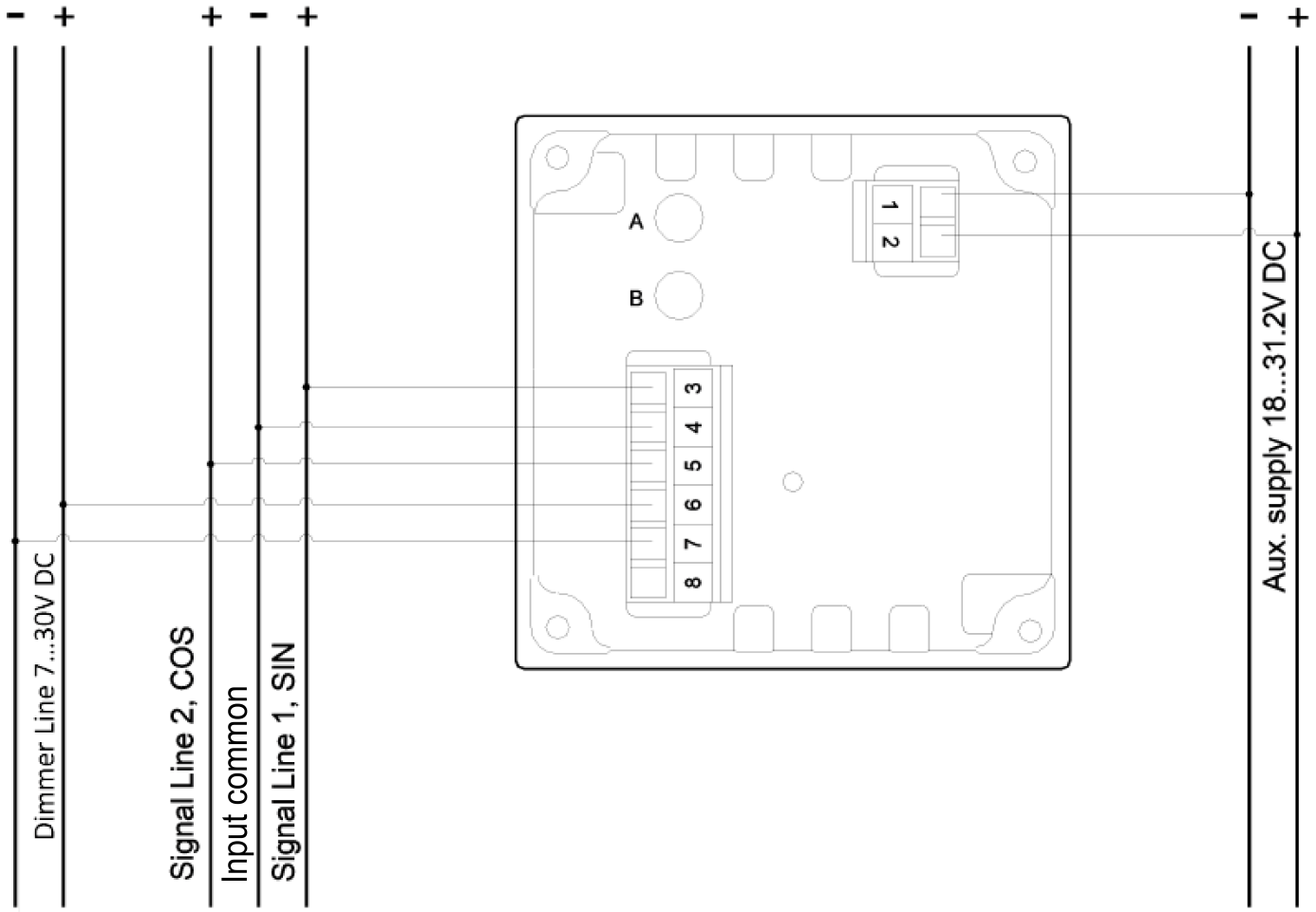

Analogue current dual input (SIN/COS, linear)

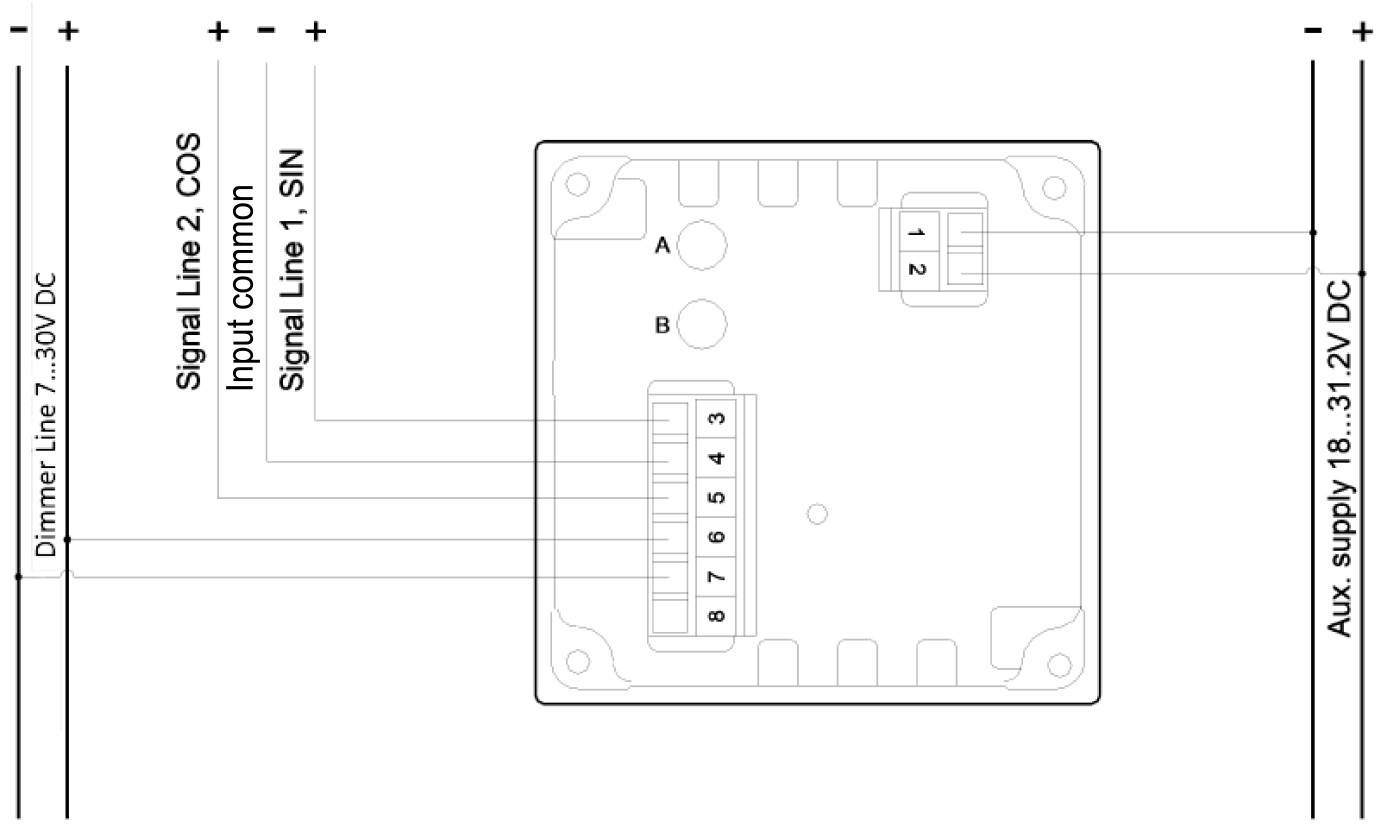

NOTE Only one instrument can be connected in the current loops.

2.1.2 Rudder potentiometer analogue indicator

Special input for direct connection to rudder potentiometer. This is not a standard functionality.

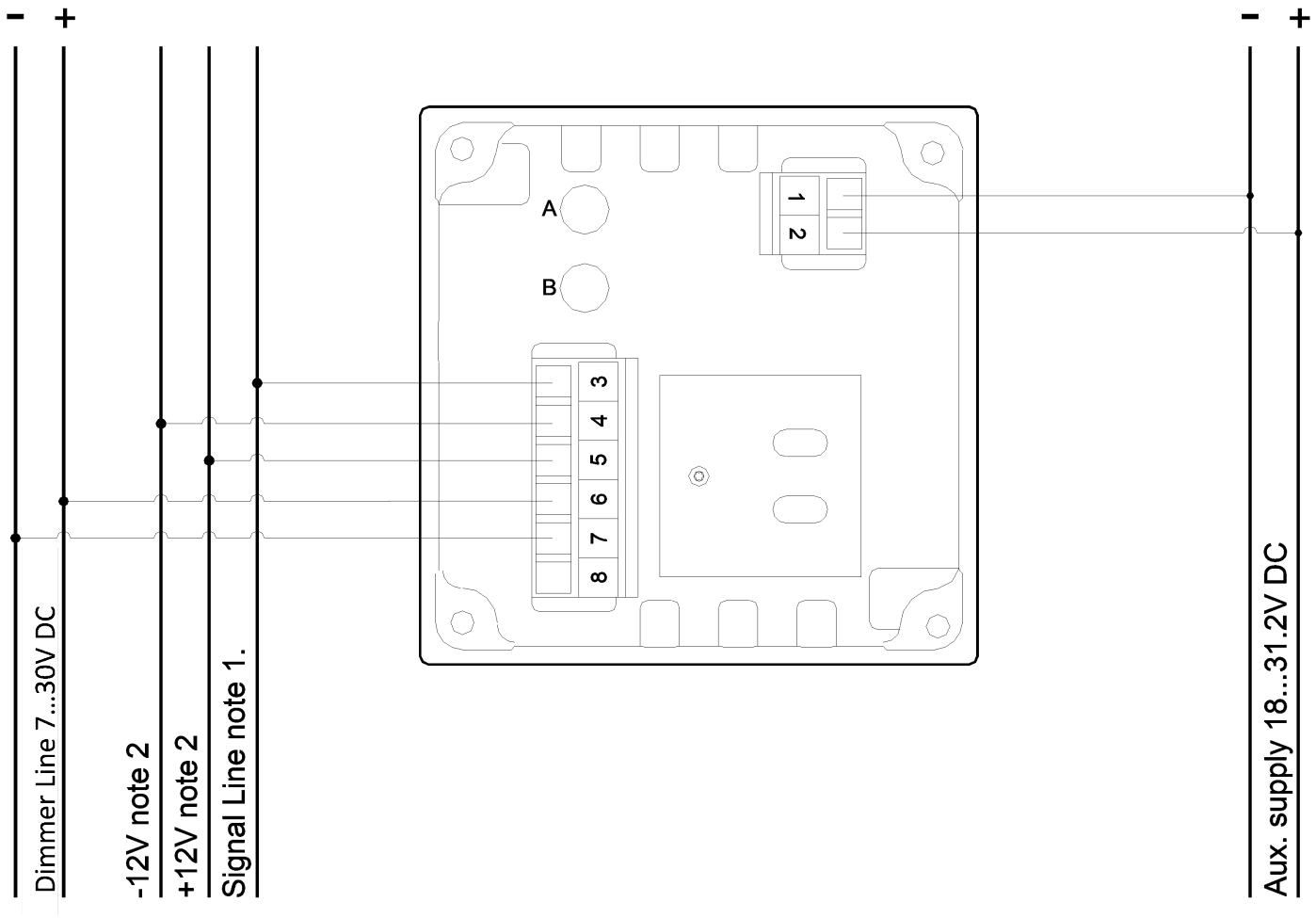

NOTE The signal line is identical to the signal on the rudder potentiometer wiper.
NOTE The -12 and +12 V DC (24 V DC) can be the same voltage as the auxiliary voltage.

As standard, the auxiliary voltage can be between 18 and 31 V DC. If the auxiliary voltage supplies ±12 V, it must be stabilised, stay below 25 V, and also supply the rudder potentiometer.

Adjustment

The minimum potentiometer (B) adjusts the zero position, for example, to correct the indicator to 0 ° at centre.

The maximum potentiometer (A) adjusts the maximum position. When the rudder is at maximum port or starboard, use potentiometer A to set the correct reading. The maximum potentiometer has an extended adjustment range in the above version. The span can be adjusted to cover ±7.5 V to ±12.5 V.

More information
See Commissioning for more information about adjusting standard analogue input indicators.

2.1.3 Dimmer setup for analogue indicators

The figures below illustrate the different ways of arranging a local dimmer on the XL indicators.

Method 1

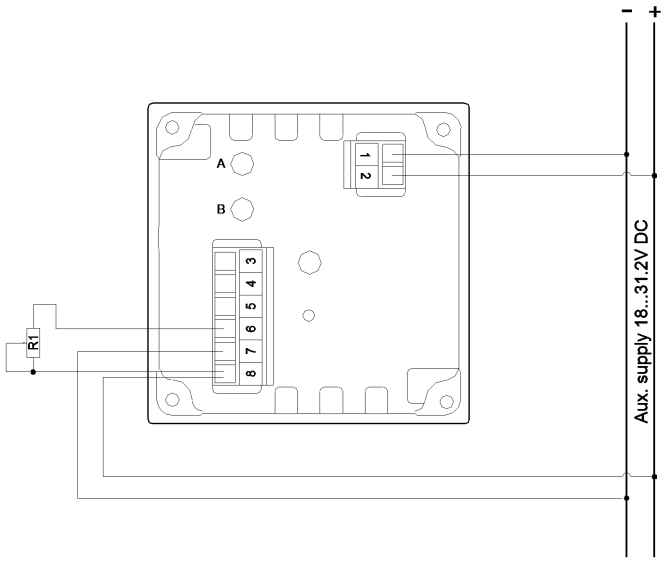

Wiring diagram

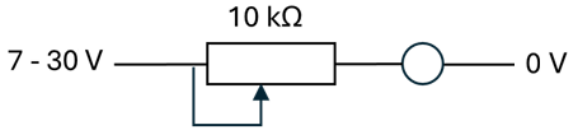

Principle diagram

Method 1 shows a dimmer connection using a 10 kΩ potentiometer in series with the illumination input (terminal 6). This method is preferred if the consumption has to be kept low. However, the illumination cannot be reduced to total darkness. The potentiometer can control only one XL indicator.

Method 2

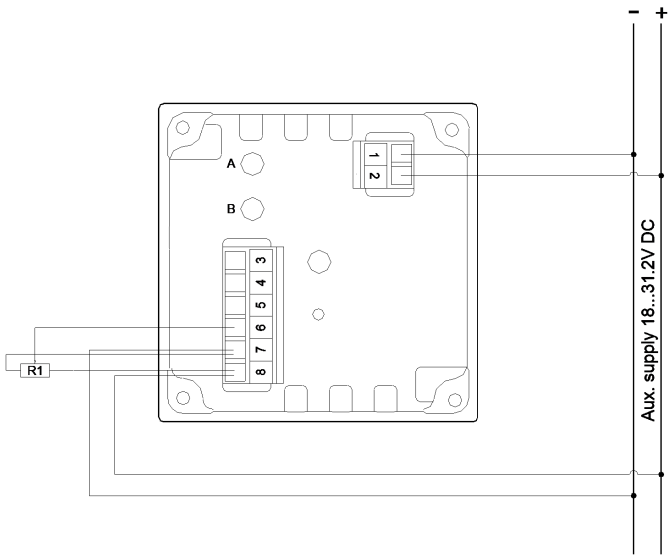

Wiring diagram

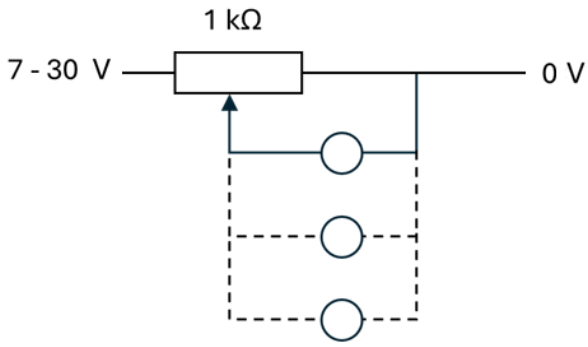

Principle diagram

Method 2 shows a dimmer connection that uses a 1 kΩ potentiometer as a voltage divider. This method lets you reduce the illumination to total darkness. The same potentiometer can control multiple XL indicators. The disadvantage is that the potentiometer consumes approximately 24 mA, even when illumination is set to total darkness.

It is also possible to use an external voltage for dimming the illumination. The regulation range from darkness to full illumination is 7 to 30 V DC. The consumption is 30 mA at 30 V DC.

2.1.4 Dual CANopen indicators

Pin number	Function		Notes
1	Supply voltage	0 V	Consumption maximum 150 mA
2		24 V	
3	CAN connection	CAN 1 H input	CAN 1 line
4		CAN 1 L input	
5		CAN 1 GND	
6		CAN 2 H input	CAN 2 line
7		CAN 2 L input	
8		CAN 2 GND	
9	Illumination analogue dimmer	NC	Dimmer input. Dimmer range 7 to 30 V DC Consumption maximum 30 mA
10		Illumination GND	
11		Illumination +	

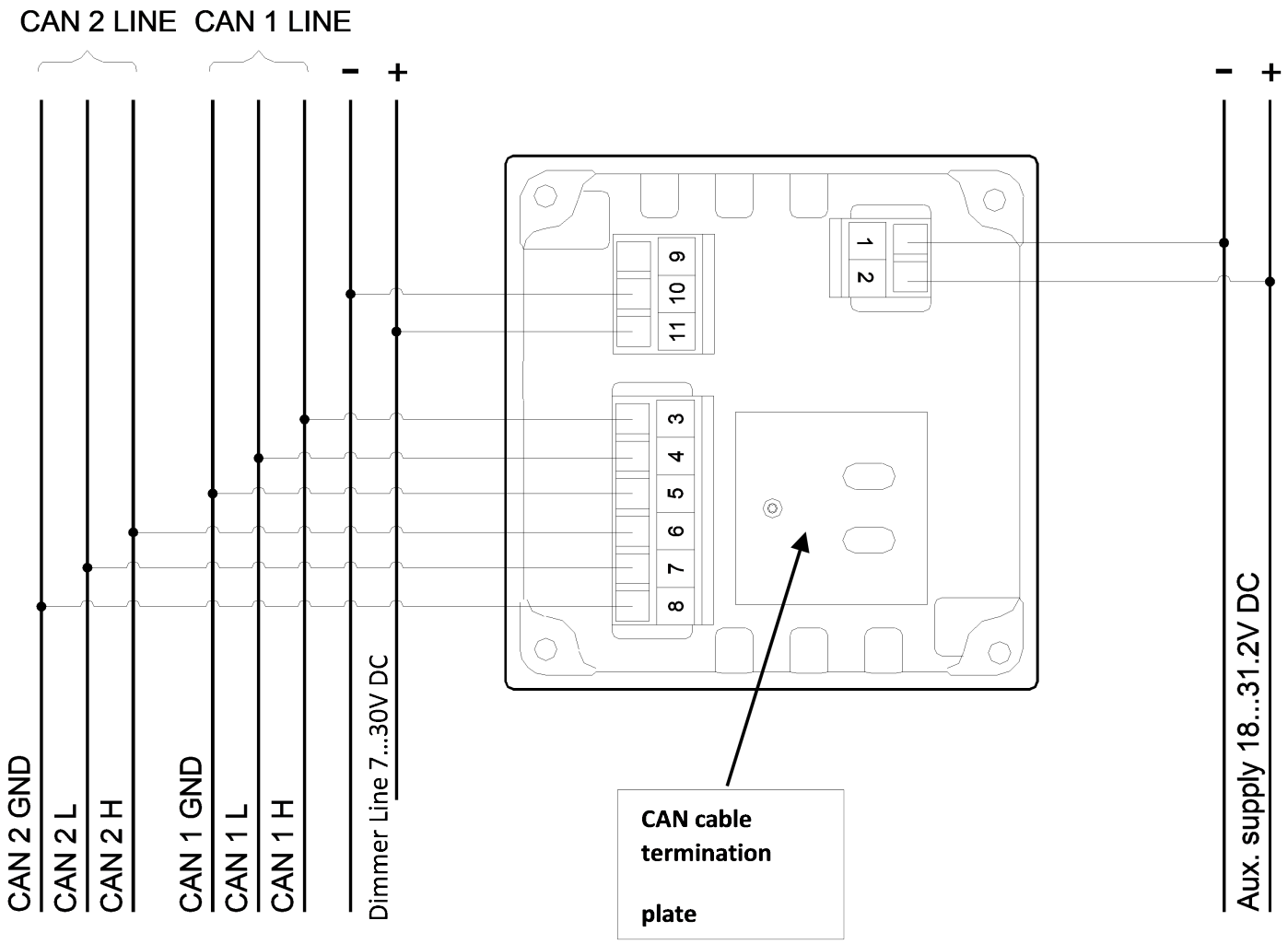

NOTE The plate shown at the arrow is for fastening the CAN cables with two strips. The strips are not included. Keep the isolation on the cables, so the screens are not connected.

CAN ground

In general, CAN 1 GND and CAN 2 GND should not be connected. In noisy environments, connect the cable screen from CAN 1 to the CAN 1 GND input. Connect the cable screen from CAN 2 to the CAN 2 GND input.

It is recommended that the two cable screens for CAN 1 and CAN 2 are not connected. Remember to terminate both ends of the CANopen line with a 120 Ω resistor.

More information
See Commissioning for more information about terminating the CANopen line.

2.1.5 Dimmer setup for dual CANopen indicators

The illumination can be controlled from the CANopen line or by the dimmer line on terminals 10 and 11.

To control the full illumination range through the CANopen line, terminals 10 and 11 must be at approximately 24 V. You can get this voltage by connecting terminal 10 to terminal 1 and terminal 11 to terminal 2. Use the auxiliary supply voltage as the illumination input.

If the dimmer line controls the illumination, set the CANopen illumination parameter to 100 % (factory setting). Because the two systems affect each other, you can adjust the illumination from both sources at the same time.

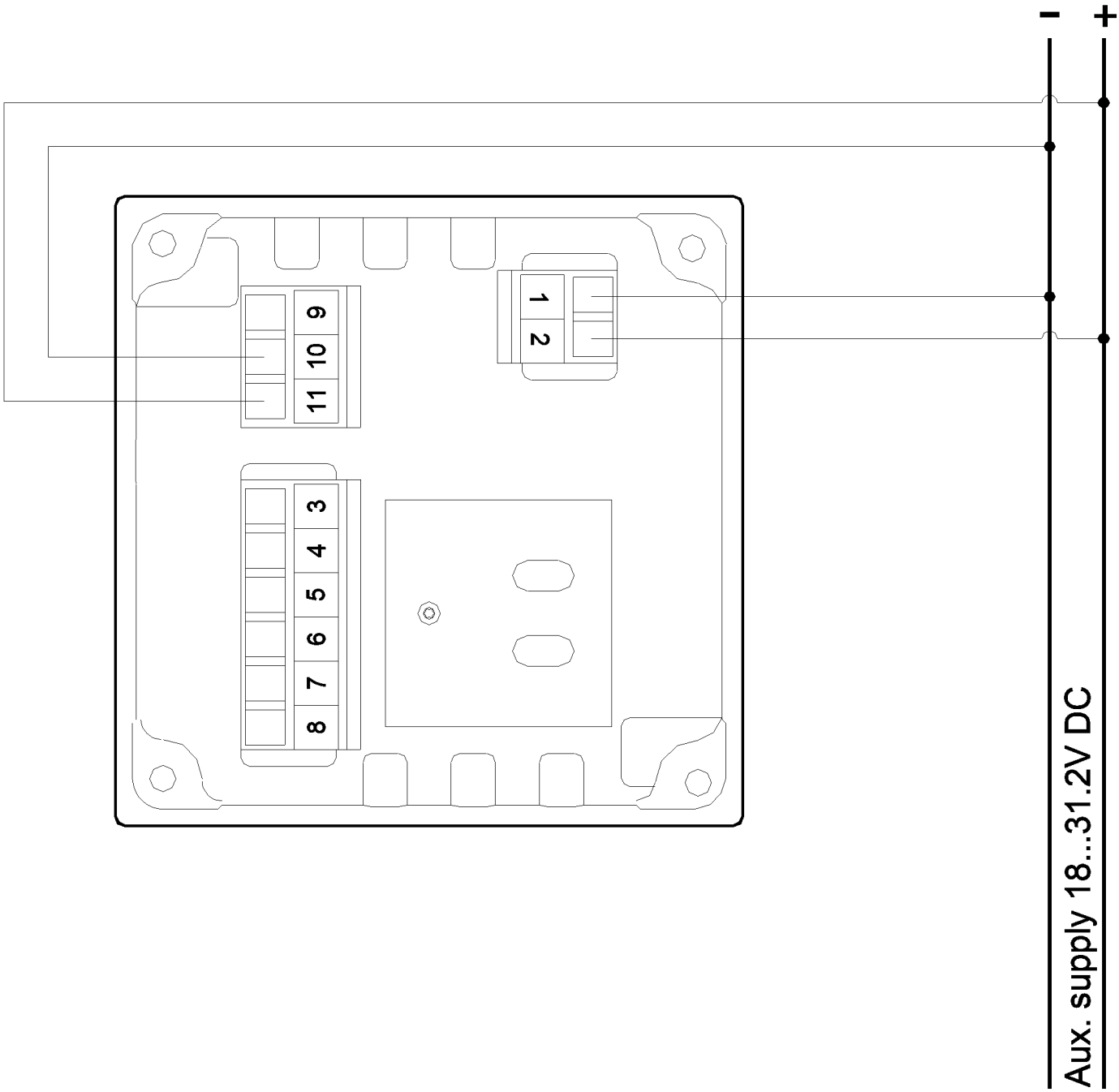

2.1.6 sCAN input indicators

Pin number	Function		Notes
1	Supply voltage	0 V	Consumption maximum 150 mA
2		24 V	
3	CAN connection	CAN 1 H input	CAN 1 line (sCAN line)
4		CAN 1 L input	
5		CAN 1 GND	
6		Not used	Used for setting of minimum, zero, and maximum withan external switch (Pin 7 to 8)∗
7		Switch/button	
8		GND	

Pin number	Function		Notes
9	Illumination analogue dimmer	NC	Dimmer input. Dimmer range 7 to 30 V DC Consumption maximum 30 mA
10		Illumination GND	
11		Illumination +	

More information
* For information on setting of minimum, zero, and maximum with an external switch, see Commissioning.

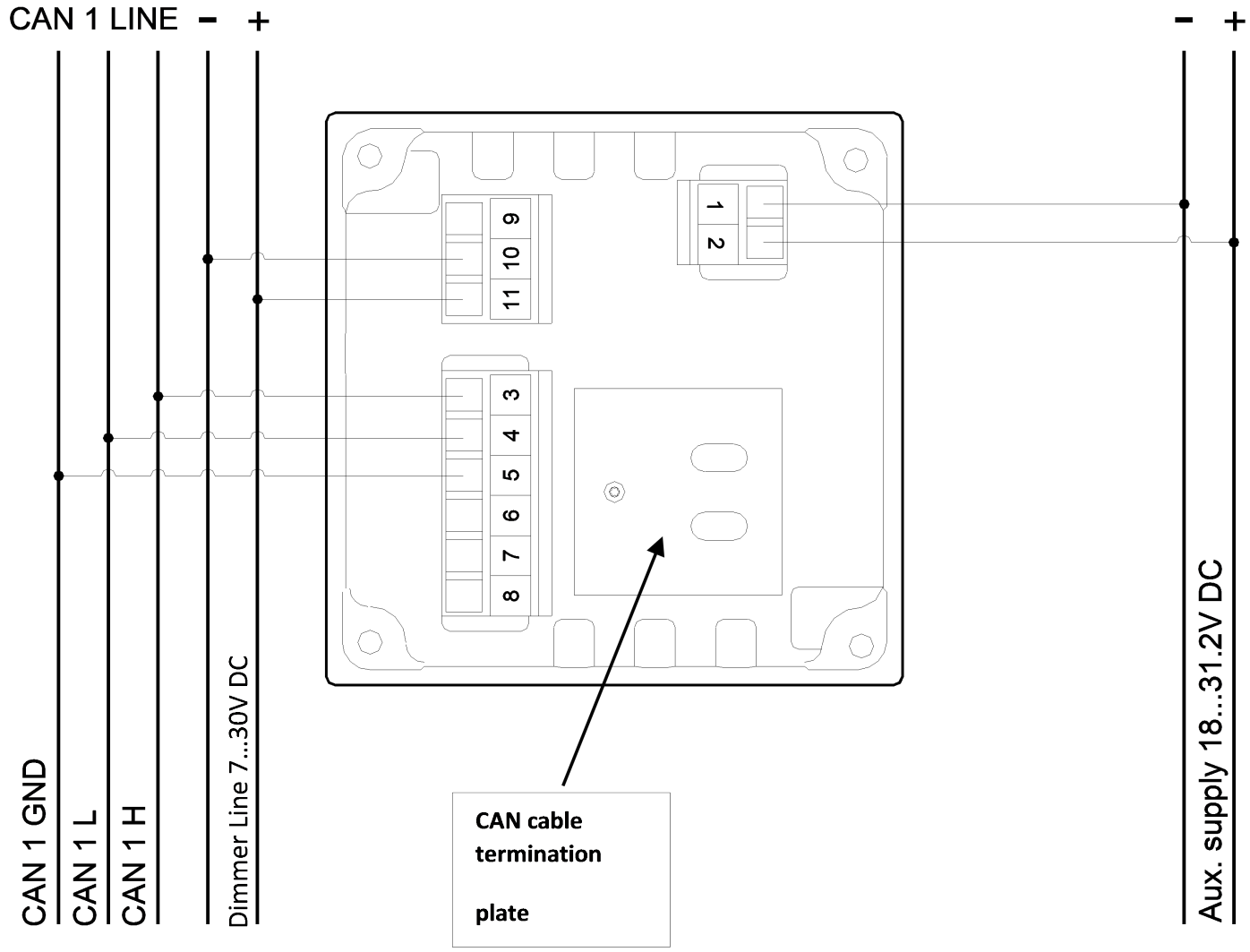

NOTE Optional calibration switch and resistor is not shown.
NOTE The plate shown at the arrow is for fastening the CAN cable with a strip. The strip is not included.

More information
For details on the optional calibration switch and resistor, see Commissioning.

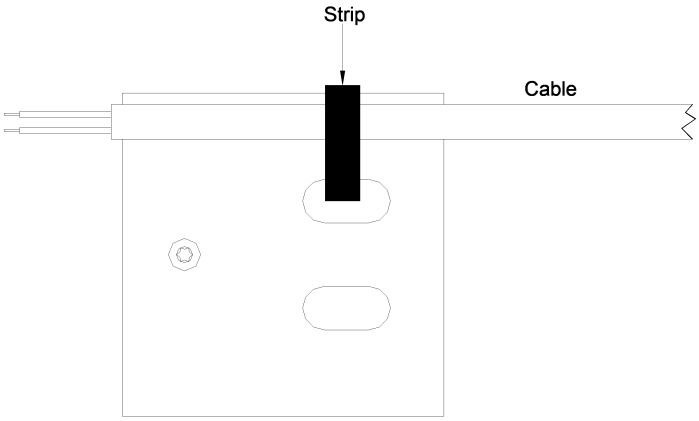

NOTE In general, CAN 1 GND should not be connected. In case of noisy environments, try to connect the cable screen to CAN 1 GND. See Commissioning.

2.1.7 Dimmer setup for sCAN indicators

The illumination can only be controlled from the dimmer line on terminals 10 and 11.

A dimmer potentiometer (R1) can control one or several indicators, like the analogue types. As pin 9 is not used internally, it can be used as a wire junction point for easier wiring.

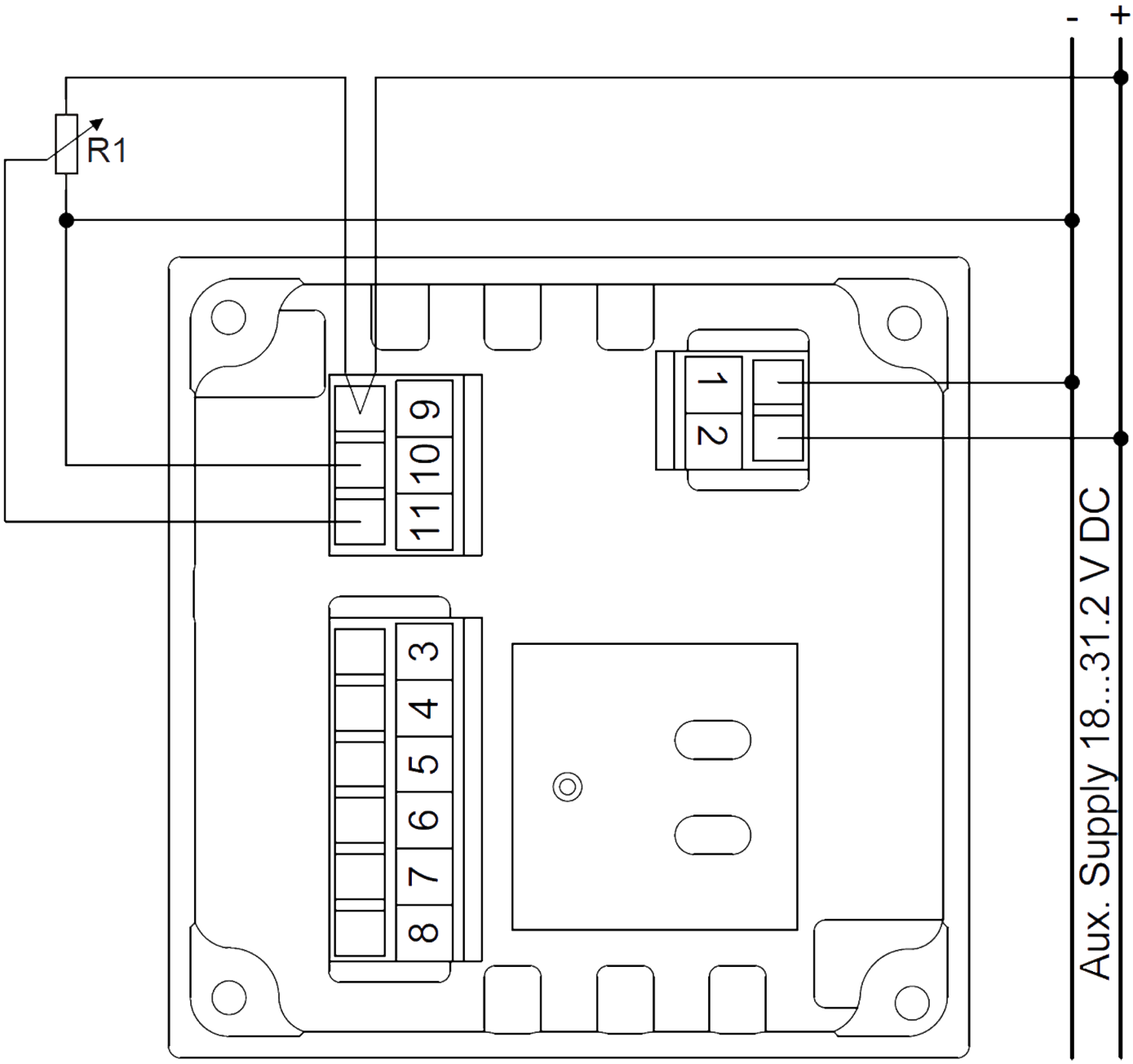
R1
9
10
11
1
2
3
4
5
6
7
8
Aux. Supply 18...31.2 V DC
-
+

2.2 Dimensions and panel cutout

2.2.1 Panel-mounted XL with rear-mounted screws

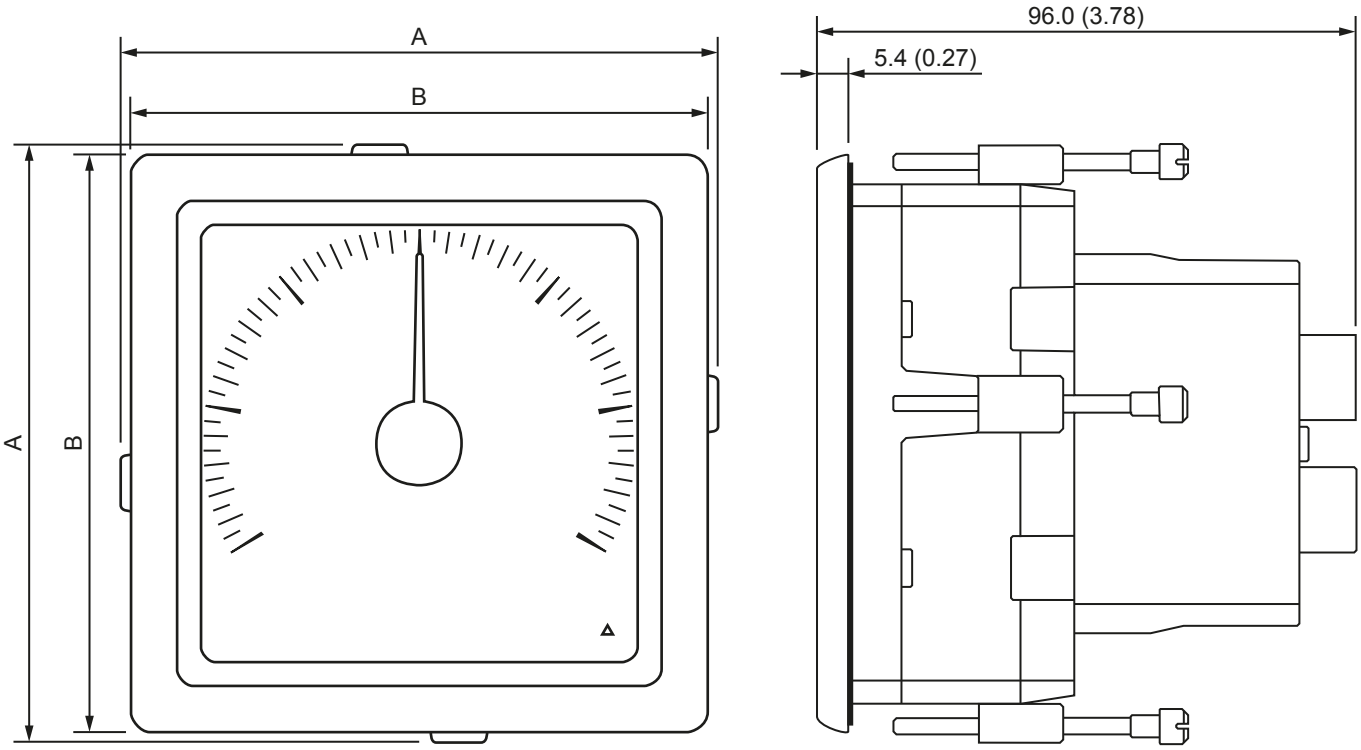

Dimensions in millimeters (inches)

Product	A	B
XL72	80.5 (3.17)	77.0 (3.03)
XL96	105.5 (4.15)	102.0 (4.02)
XL144	152.0 (5.99)	148.0 (5.83)
XL192	200.0 (7.88)	196.0 (7.72)

2.2.2 Panel-mounted XL with front-mounted screws

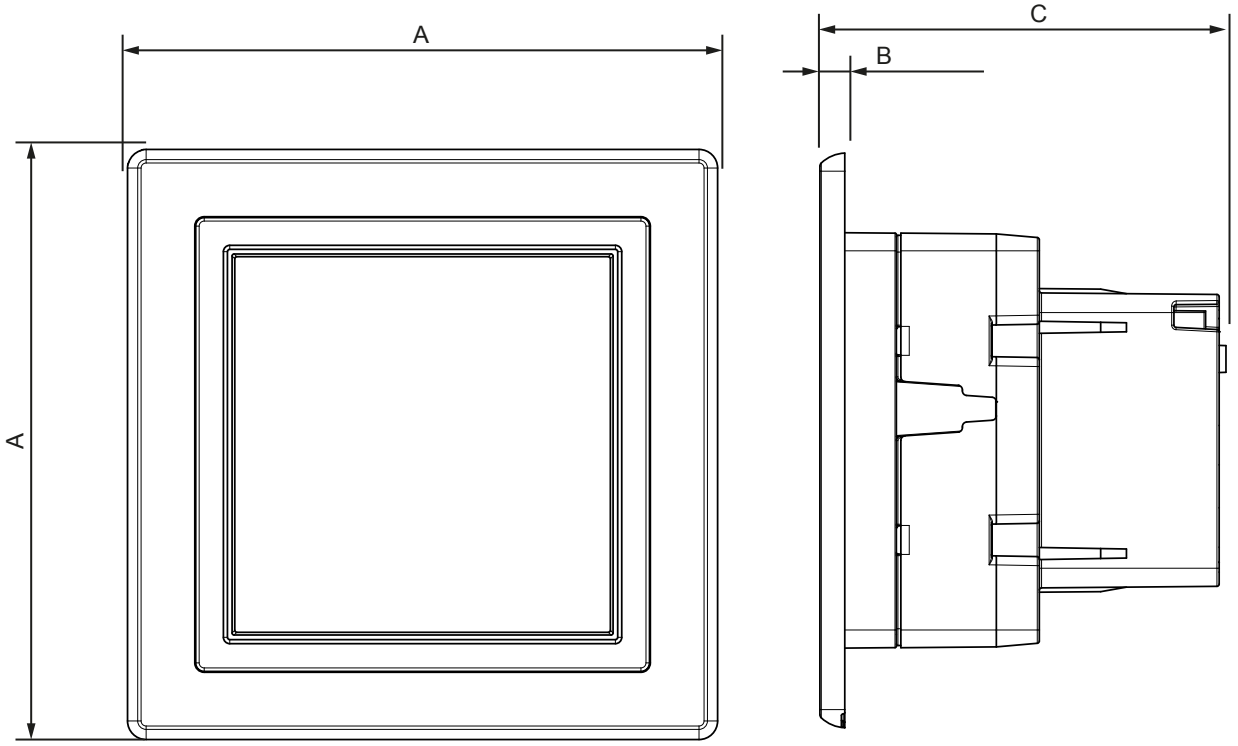

Dimensions in millimeters (inches)

Product	A	B	C
XL96	127 (5)	5.5 (0.22)	89.8 (3.54)
XL144	173 (6.81)	5.5 (0.22)	82.8 (3.26)

2.2.3 XL panel cutout

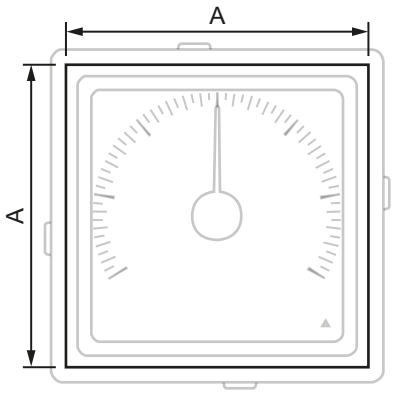

Dimensions millimeters (inches)

Indicator	A	Tolerance
XL72	68.5 (2.697)	-0.0/+0.7 (-0.0/+0.027)
XL96	92.5 (3.642)	-0.0/+0.8 (-0.0/+0.031)
XL144	138.5 (5.453)	-0.0/+1.0 (-0.0/+0.039)
XL192	186.5 (7.343)	-0.0/+1.1 (-0.0/+0.043)

2.3 Mounting XL indicators

Mounting follows the standard DIN mounting for indicators. Use the fixing clamps to mount the indicator from the rear. Indicators with IP52 protection use two clamps for size 72 and 96 and four clamps for size 144 and 192. If you mount the indicator to meet IP66, use the gasket and all supplied clamps. This makes the pressure on the gasket uniform.

More information
See the appendices for details about indicator outlines.

Mount the supplied blue gasket into the groove on the frame. Make sure the flat side is in the groove, the rounded side points outward, and the gasket is mounted evenly.

3. BW wiring and installation

3.1 Wiring

To access the terminals, remove the bulkhead box. Do this by unscrewing the eight screws on the rear side of the box. To reach the screws, use a torx T10 tool with a long bit (50 mm).

Location of the rear screws on BW144

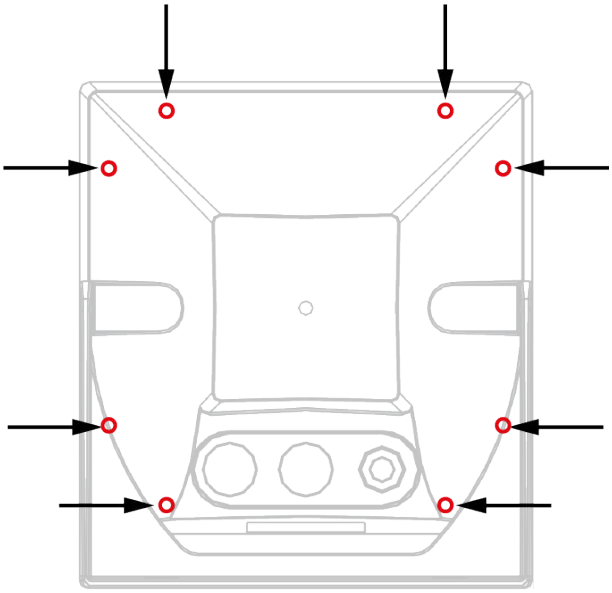

NOTE BW192 also has eight screws.

Having unscrewed the bulkhead box, the indicator can be taken out of the box. The wiring of the BW terminals is identical to the description for XL instruments.

When the wiring is done, the indicator is remounted in the bulkhead box using the eight screws. Recommended torque for the screws is 0.8 Nm (±0.2). Put the supplied black gasket into the groove on the indicator frame. Make sure the rubber rim faces into the groove.

More information
See XL wiring and installation, Wiring for the wiring diagrams used for BW.

3.1.1 Dimmer wiring

In addition to the PG glands, the bulkhead box is equipped with a potentiometer. This potentiometer is used for local dimmer for the indicator.

More information
See XL wiring and installation, Wiring for more information about how to wire the dimmer potentiometer.

3.1.2 Cable glands

The bulkhead box is equipped with two PG cable glands:

- BW144: PG9 (cable gauge: 5.0-8.0 mm)
- BW192: PG16 (cable gauge: 8.0-14.0 mm)

On delivery from DEIF, the two PG glands are sealed with protection blind plugs.

NOTE The PG glands cannot be changed to another size or type, as they are a vital part of the IP66 protection.

If the installation cable has a different gauge than specified, use a junction box. Use it to connect the cable to the installation.

NOTE Remember to fasten the nut on the PG glands.

3.2 Dimensions and drilling template

3.2.1 Bracket-mounted BW

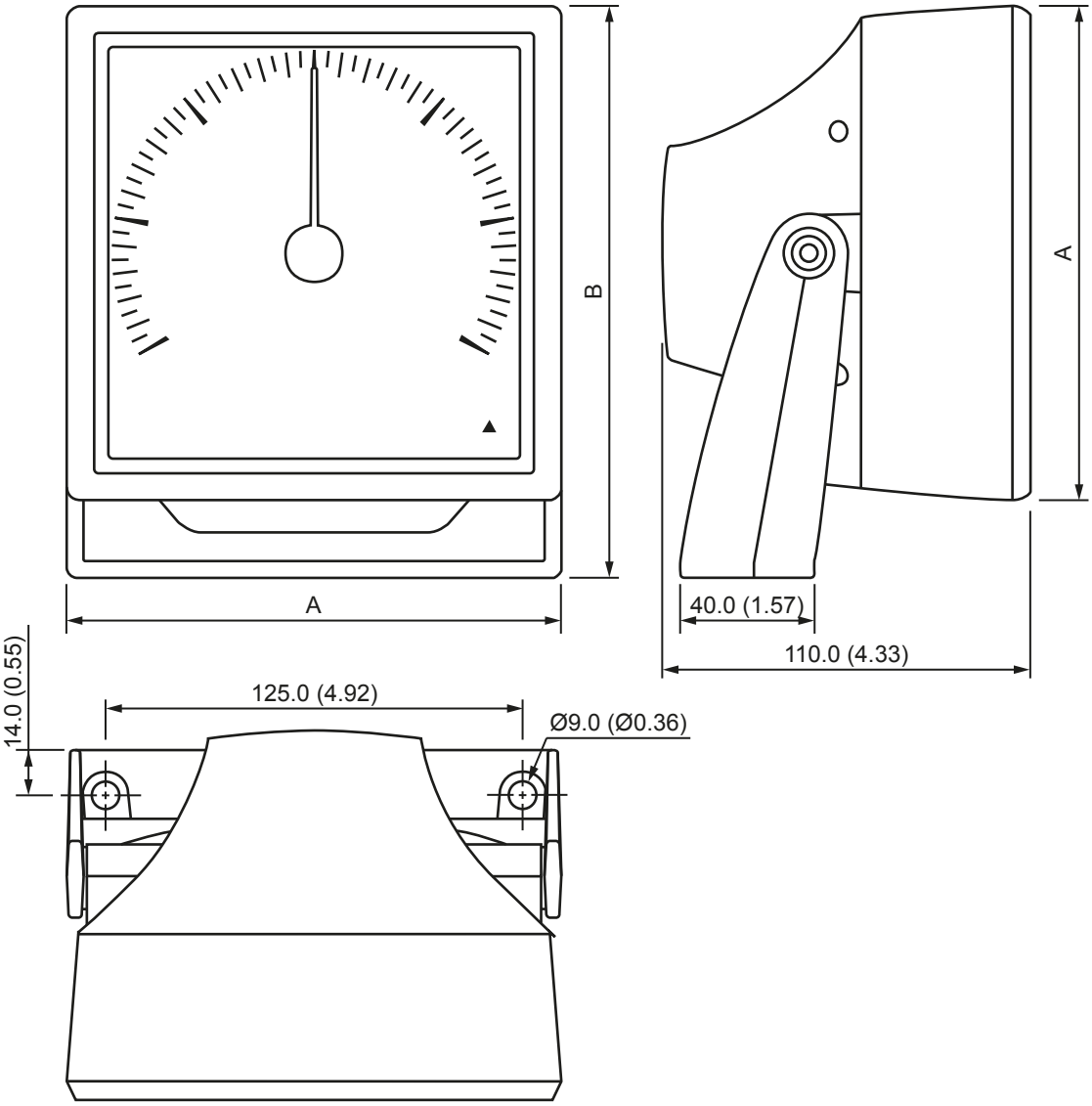

Dimensions in millimeters (inches)

Product	A	B
BW144	148.0 (5.83)	171.0 (6.73)
BW192	196.0 (7.72)	219.0 (8.62)

Cable glands

Product	Type	Cable gauge in millimeters (inches)	Amount	Placement
BW144	PG9	5.0 to 8.0 (0.20 to 0.31)	2	Rear
BW192	PG16	8.0 to 14.0 (0.31 to 0.55)	2	Rear

3.2.2 Drilling template

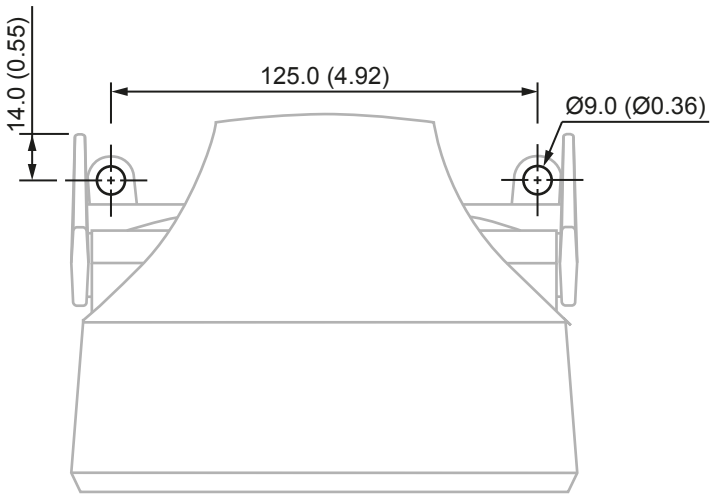

NOTE The drawing is only a guideline and is not to scale.

3.3 Mounting BW indicators

To mount the indicator using the bracket, use two appropriate screws. These screws are not included.

The mounting bracket is asymmetrical and can therefore be arranged in two different ways.

NOTE The distances between the bracket screw holes on BW144 and BW192 are the same (125 mm).

4. BRW-2 wiring and installation

4.1 Wiring

4.1.1 Overview

BRW-2 is protected from ESD (static electricity), so no special protection from ESD is needed during mounting.

Dismount the potentiometer plate (use a standard 4 mm Allen key) for the connections terminals to be visible. Be careful not to damage the gasket when the potentiometer plate is dismounted from the housing.

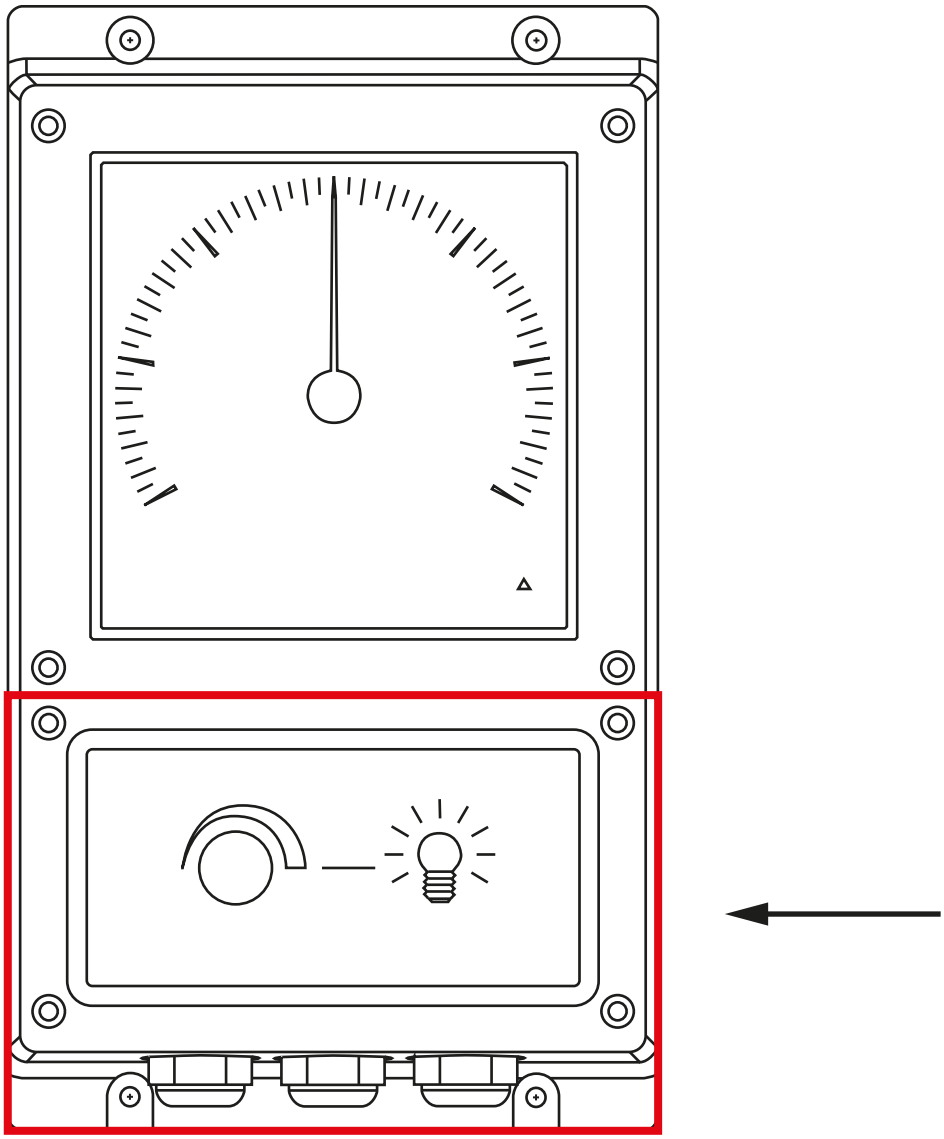

Cable dimensions between 0.2 and 2.5 mm^2 multi-stranded or maximum 4 mm^2 single-stranded can be used for the screw terminals. Cable dimensions between 13 and 18 mm are possible with the PG21 gland.

NOTE The PG glands cannot be changed to another size or type. They are a vital part of the IP66 protection.

4.1.2 Analogue input terminal overview

Pin number	Function	Text	Description	Notes
1	Supply voltage	0 V		
2		24 V		
3	Analogue input	INPUT 1	Sinus	Input 1 and input common used for single input* On 4 to 20 mA, input 1 is CW and input 2 CCW
4		GND	Input common	
5		INPUT 2	Cosinus	
8	NC			No connection
9	X4 connector Illumination		Orange wire	Dimmer potentiometer (10 kΩ)
10			Brown wire	
11			Red wire	Wiper on the dimmer potentiometer
A	Analogue adjustment	Maximum adjustment		Maximum and minimum adjustment, sealed by label located on the rear of the XL192
B		Minimum adjustment		

NOTE * Input common is mutual for input 1 and input 2.

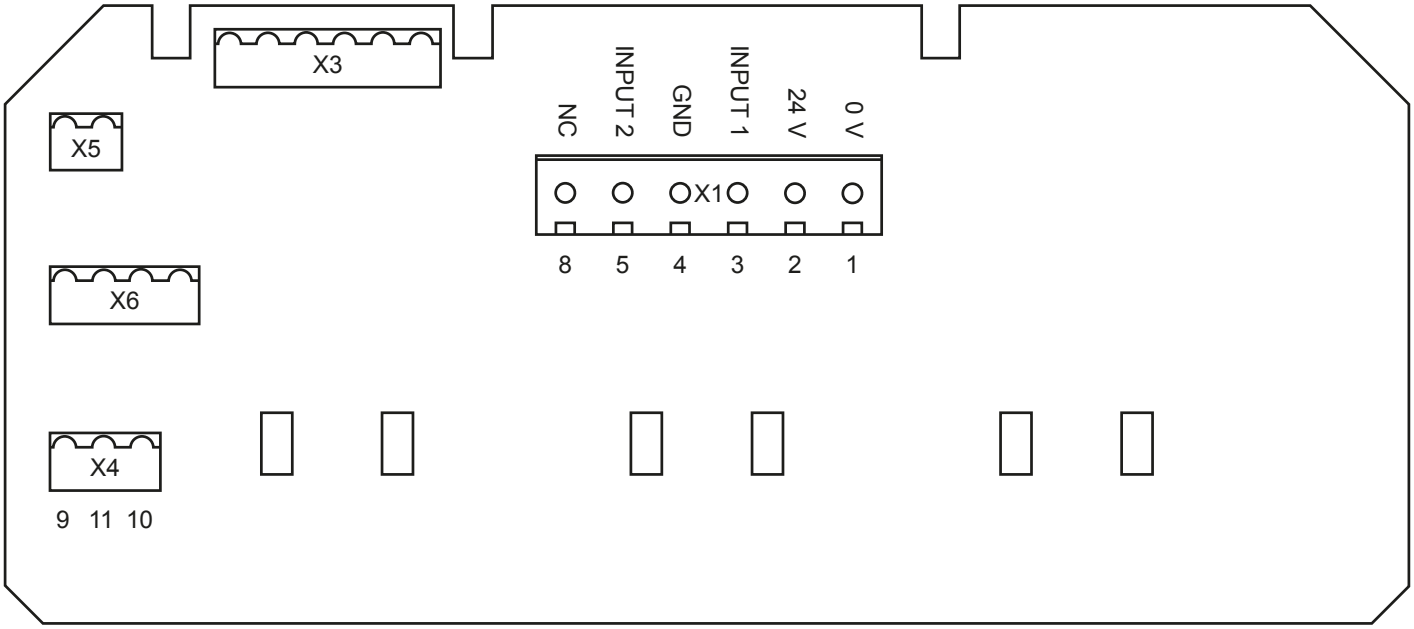

Maximum and minimum analogue adjustment

To perform the analogue adjustments, remove the XL 192 built into the top part of the BRW-2. Maximum and minimum adjustments are located on the rear of the XL 192, and sealed by a label.

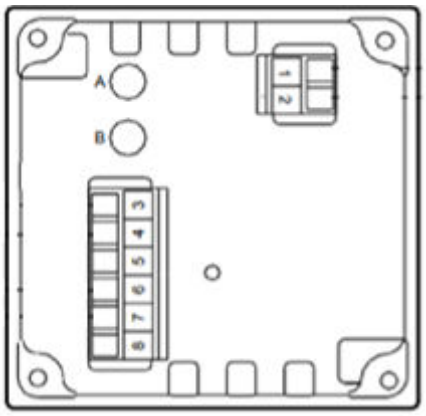

4.1.3 CANopen input terminal connections

Pin number	Function	Text	Description	Notes
GND	CAN connection	CAN 1 GND		CAN 2 line or external switch for calibrating sCAN
L input		CAN 2 L input		
H input		CAN 2 H input		
GND		CAN 1 GND		CAN 1 line (sCAN line)
L input		CAN 1 L input		
H input		CAN 1 H input		
24 V	Supply voltage	24 V DC		
0 V		0 V DC		
9	X4 connector Illumination		Orange wire	Dimmer potentiometer (10 kΩ)
10			Brown wire	
11			Red wire	Wiper on the dimmer potentiometer

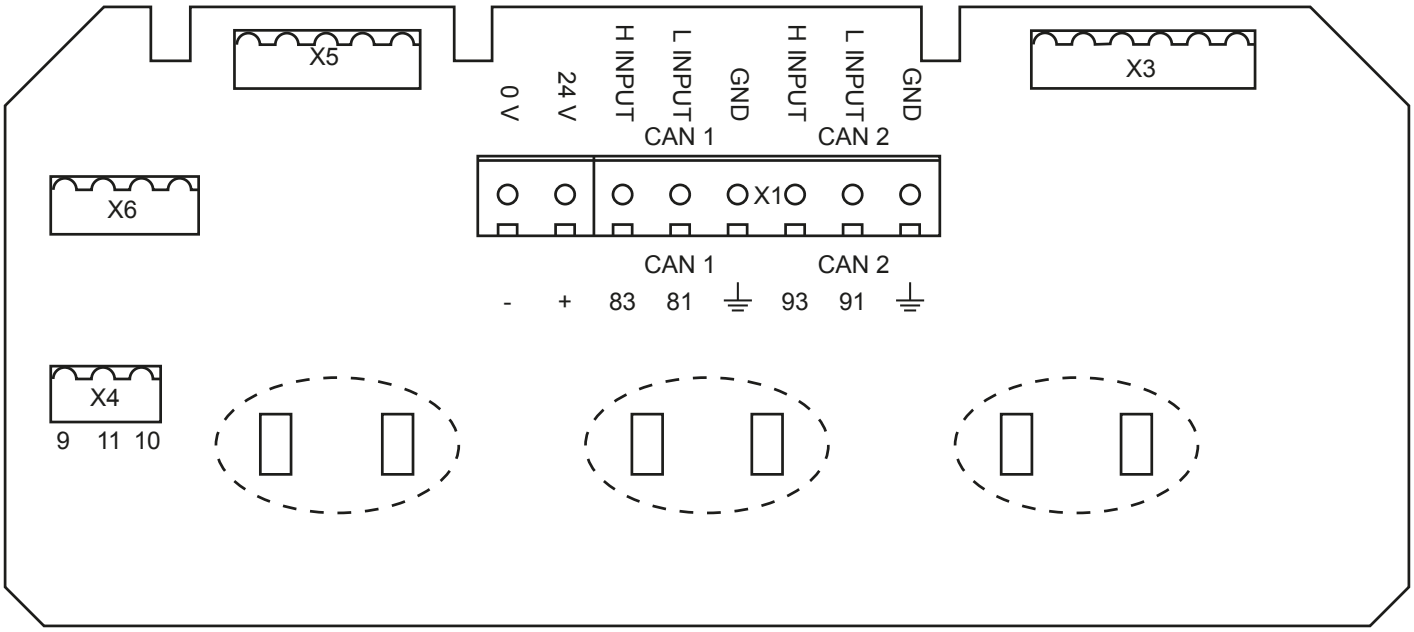

NOTE Use strips to terminate cable shields to PCB to avoid noise (see the dashed circles).
NOTE Jumpers J1 and J2 are used as end resistors (terminations) of CAN 1 and CAN 2. (Not shown on image.)

4.1.4 Dimmer wiring

The BRW-2 can be ordered with a built-in dimmer on the front plate or without a built-in dimmer.

Built-in dimmer

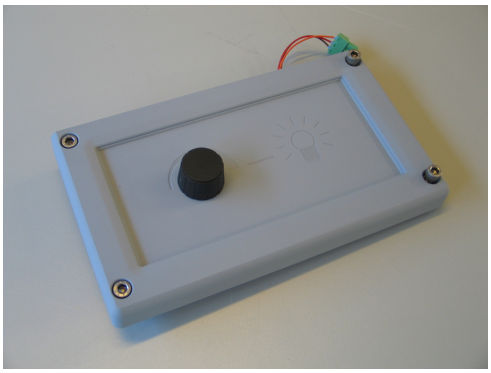

Blank front plate (without a built-in dimmer)

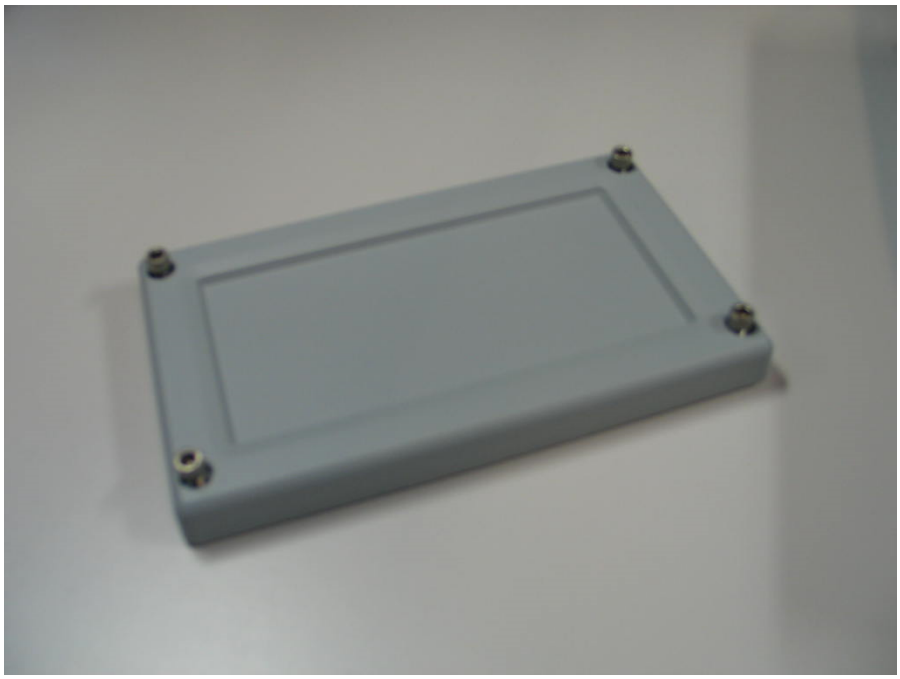

If a version without a built-in dimmer is used, you can connect an external dimmer to X4 (terminals 9, 10, and 11).

4.2 Dimensions and drilling template

4.2.1 Surface-mounted BRW-2

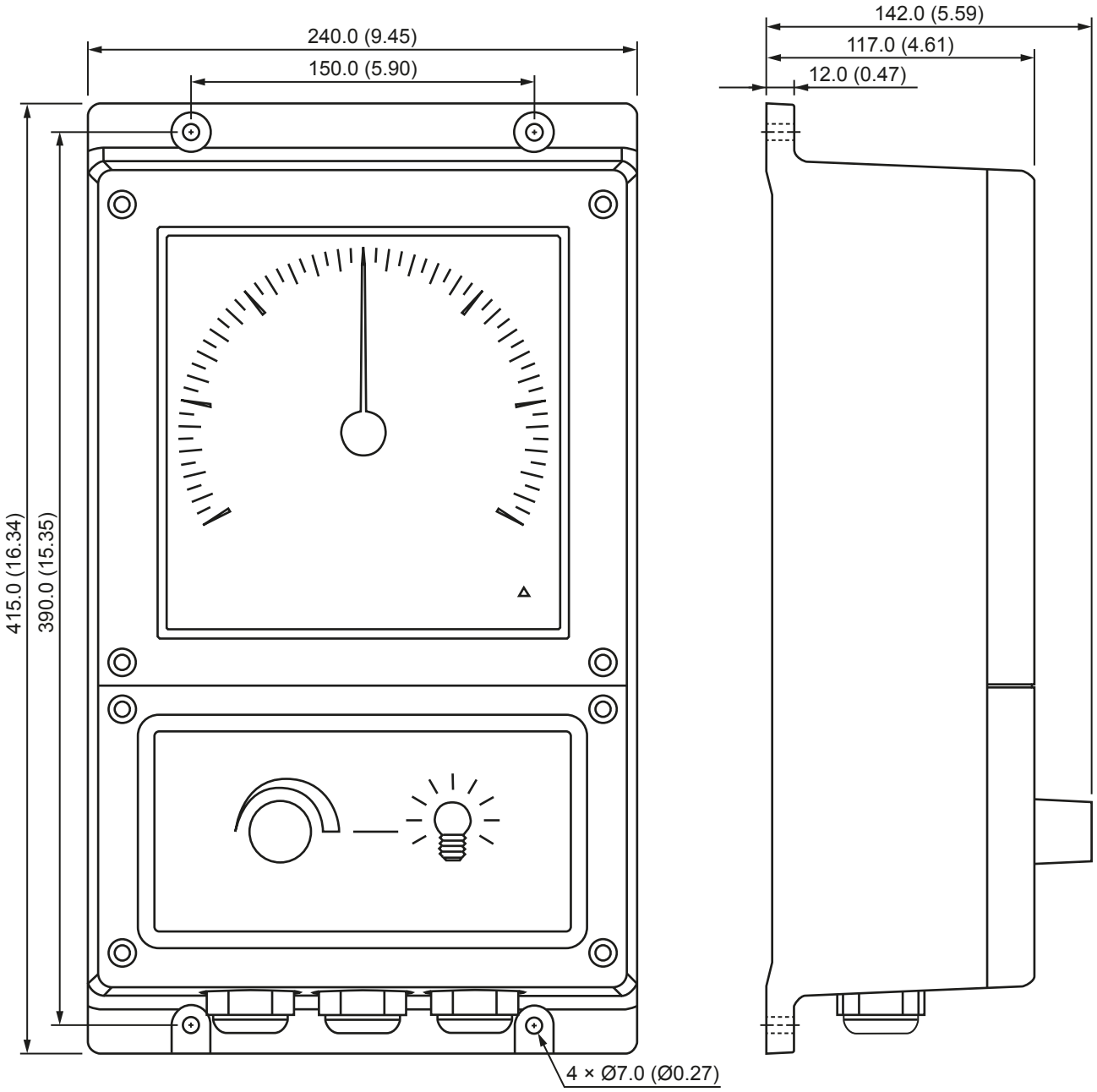

Cable glands

Product	Type	Cable gauge in millimeters (inches)	Amount	Placement
BRW-2	PG21	13.0 to 18.0 (0.51 to 0.71)	3	Bottom

If you order a BRW-2 without an internal dimmer, you can order a separate IP66 dimmer box. Alternatively, order a dimmer kit for panel mounting.

Item number	Part	Description
2951890010-01	Dimmer box	Waterproof dimmer box for indicators. 10 kΩ potentiometer in IP66 plastic box with PG13.5/PG16 cable glands.
2951890010-02	Dimmer kit	Parts for dimming, dimmer potentiometer (1 kΩ), and fittings for panel mounting.

4.2.2 Drilling template

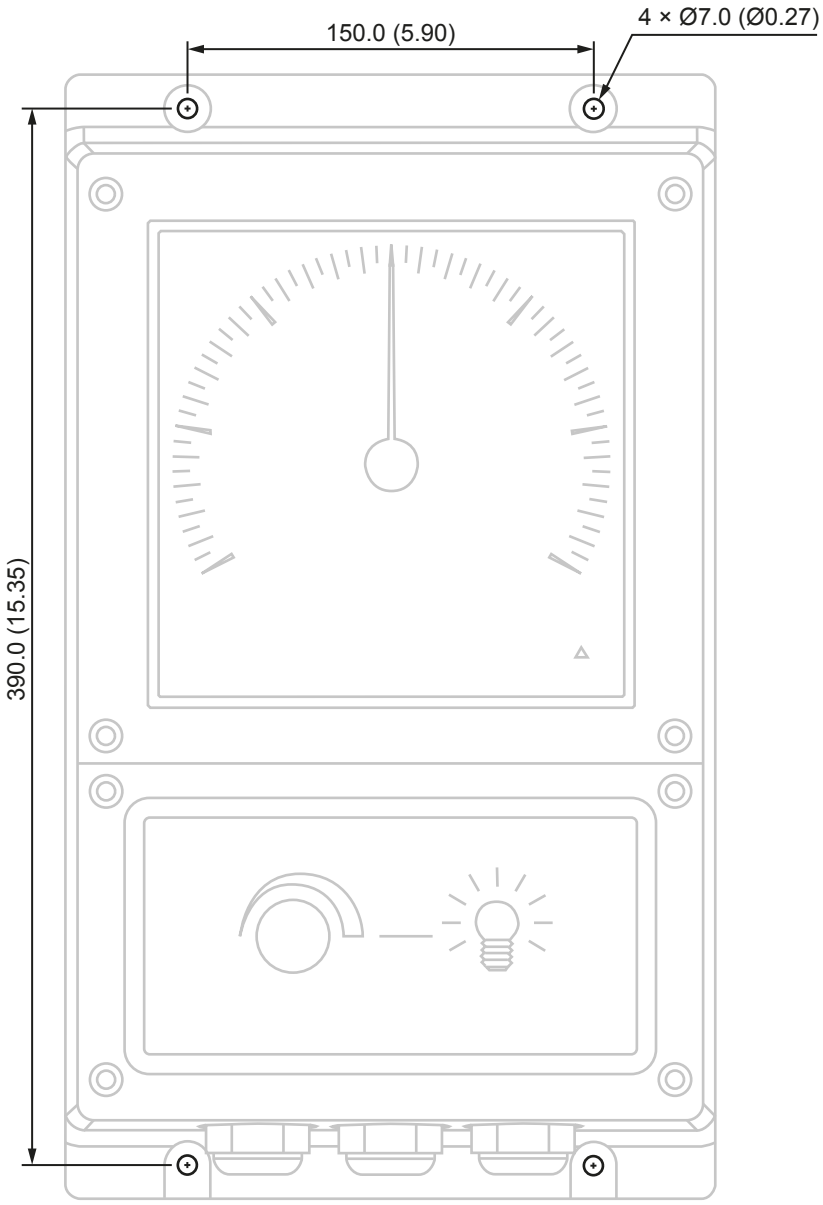

NOTE The drawing is only a guideline and is not to scale.

4.3 BRW-2 replacement for BRW-1

This is a special version of the BRW-2 with additional circuits to simulate BRW-1 operation. The BRW-2 replacement has an accuracy class of 1.0. For future replacements, it is not necessary to replace the entire BRW-2 indicator. You may only need to replace the XL192 indicator.

Standard voltage for supply and illumination is 24 V DC. Connect the illumination supply 24 V DC to terminals 5 and 6. For personal protection, the terminal marked *EARTH* must be connected to the ship's hull. This is also recommended in order to avoid static electricity influencing the instrument accuracy.

The potentiometer marked *MAX. ADJ* is between the two connectors. Use it to make small deflection adjustments on the instrument. This function is available only on replacement PCB 1045250070C. Use it to match the indicator scaling to the existing installation.

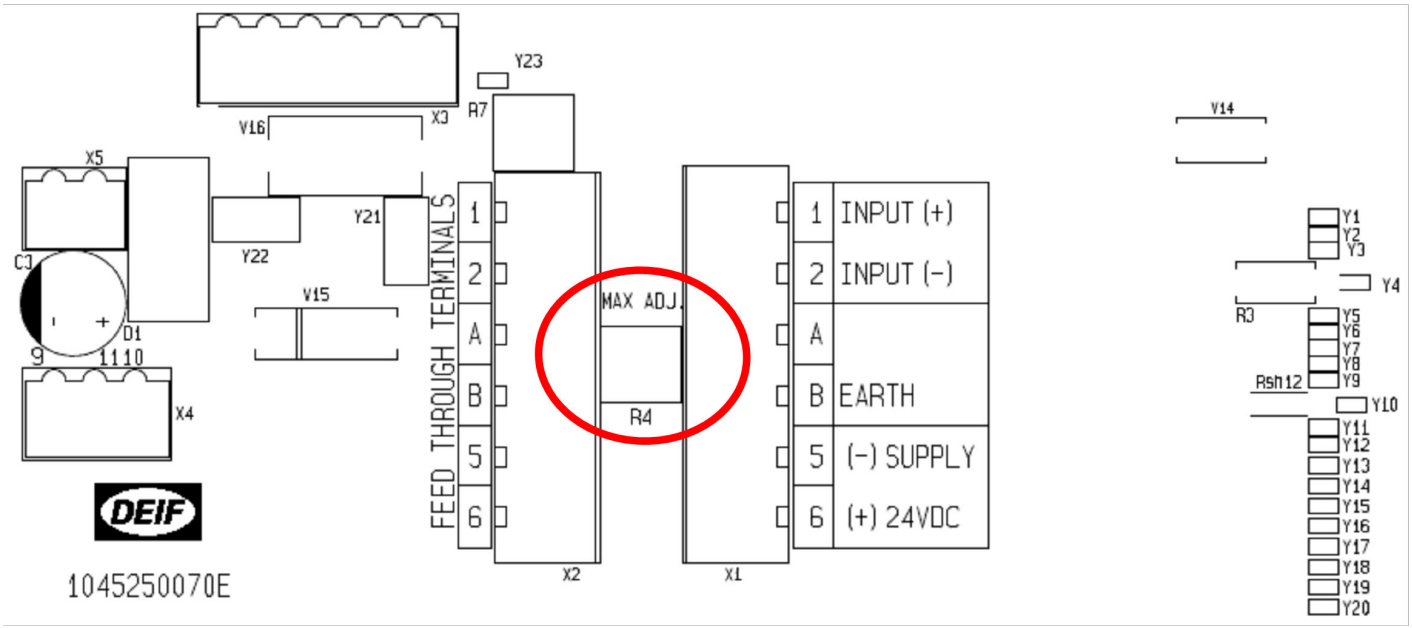

The potentiometer R4 is used for fine adjustment of the deflection. The special replacement type has an accuracy of class 1.0 due to the external adjustment potentiometer R4.

NOTE When replacing the XL192 indicator built into the BRW-2, the measuring range is either 0 to 1 mA or ±1 mA. The measuring range is indicated on the type label on the XL192 indicator.

4.4 Replacement of XL192 indicator in BRW-2

4.4.1 Replacement instructions

The indicator inside the BRW-2 can be replaced with an XL192 indicator. If the original gasket was damaged an IP66 XL192 should be ordered as a repolacement part.

To replace the indicator:

1. Dismount the top frame by removing the four screws from the frame.
2. Take out the XL instrument (and note the measuring range on the product label).
3. Disconnect the mounted cables.
4. Mount the new XL instrument.
5. Mount the cables to the new XL instrument.
6. Place the gasket between the XL instrument and the base.
7. Mount the top frame.
8. Fasten the four screws in the frame. Recommended torque for the screws is 4.5 Nm (±0.2 Nm).

4.4.2 Adjustment help for analogue input indicators

When you remove the XL192 to adjust the rear side, put the instrument into the grooves in the BRW-2 housing. This position gives you free hands and makes the adjustment easier.

5. Commissioning

5.1 Commissioning preparation

Do not remove the protective plastic from the display before the installation is approved by the class surveyor.

When the indicator is without power, the pointer position is random. When power is applied to the indicator, the pointer moves randomly for a few seconds. When the pointer settles, position adjustment and commissioning can begin.

5.2 Commissioning analogue indicators

The XL and BW/BRW-2 indicators are equipped with an amber LED indicator located in the corner of the scale.

After power-up, the LED flashes once per second. After two seconds, the LED turns off. If there is an internal error, the LED continues to flash. Contact DEIF Customer Care if an internal error occurs.

If the indicator gets an incorrect input signal, the LED shows an out-of-range condition after two seconds. It does this by moving the pointer to the error position. This continues until the input is adjusted to be within the nominal input range. If the indicator has a 360 ° scale, a flashing LED also shows the faulty input.

The working range is -2 % to 102 % of the nominal input range. If the input is outside of the working range, the pointer indicates *out of range*.

More information
See Error handling for details about fault indication.

5.2.1 Special 4 to 20 mA functionality

The 4 to 20 mA single version has a feature that changes the pointer deflection. Set it to CW on terminals 3 and 4 or CCW on terminals 4 and 5.

The selection between the two inputs happens during each power-up of the indicator. During power-up, the two inputs search for a valid input signal. A valid input signal is in the range of 5 to 20 mA. When the indicator detects a valid input on one input, it uses that input. It uses the input until you power off the indicator.

NOTE Due to product tolerances, the minimum input for valid detection is between 4 and 5 mA. Use 5 mA to ensure detection.
NOTE When a valid input is present at both inputs simultaneously, no selection is made. Only attach the input to the desired input terminals.
NOTE At each power-up, the product searches for valid input.
NOTE Even when you use terminals 4 and 5 (CCW), the indicator starts at the minimum error position. The pointer stays there until the input exceeds 5 mA.

5.2.2 Adjustment of single analogue input indicators

It might be necessary to adjust the scale reading on the XL to ensure the indicator shows the true rudder position.

Move the rudder to the minimum position. For example, for a 4 to 20 mA signal, this would be 4 mA. Use potentiometer B to make the offset adjustment. Next, move the rudder to the maximum position, for a 4 to 20 mA signal, this would be 20 mA. Use potentiometer A to adjust the gain. Move the rudder to the zero position, for a 4 to 20 mA signal, this is 8 mA. Use potentiometer B to adjust the offset.

NOTE Minimum adjustment must be performed before maximum adjustment.

NOTICE

Input limits

Do not adjust the minimum and maximum with an input signal at the exact limits. For example, do not use 0 V when you adjust a 0-10 V instrument. Potentiometer B does not adjust below the zero point on the scale. This can add an unwanted offset and cause a linearity error. The same risk applies to the maximum adjustment.

5.2.3 Adjustment functionality

XL type	Potentiometer A	Potentiometer B
240 ° pointer	Gain Range: Approximately ±10 % of full scale	Offset Range: Approximately ±10 % of full scale
360 ° pointer	At full CW, the EM (electrical middle) is as standard. At full CCW, the EM changes to +180 ° of standard.	+/-10 degree digital offset of the pointer/disc Similar to a mechanical adjustment on a moving coil indicator

The maximum position is fully CW on CW types and fully CCW on CCW types.

If you need to revert to factory settings on the adjustment, place the potentiometers in the middle position.

5.2.4 Out of range definition

When input exceeds the nominal range by more than 2%, the pointer moves to the *out of range* position. The nominal range is -2 to 102%.

More information
See Appendix A for examples of out of range pointer positions.

NOTE The 2 % value is calculated from the maximum input value.

Examples of out of range values

Out of range (low)	Nominal range	Working range	Out of range (high)
Under 3.60 mA	4.00 to 12.00 to 20.00 mA	3.60 to 20.40 mA	Over 20.40 mA
Under -0.2 V	0.0 to 5.0 to 10.0 V	-0.2 to 10.2 V	Over 10.2 V
Under -10.2 V	-10.0 to 0.0 to 10.0 V	-10.2 to 10.2 V	Over 10.2 V

5.3 Commissioning sCAN indicators

The XL and BW/BRW-2 indicators are equipped with an amber LED indicator located in the corner of the scale.

After power-up, the LED is flashing once every second until a valid CAN signal is present. Then the LED turns off.

In the sCAN version, some basic settings can be changed in the system/indicators:

- Zero setting
- Minimum value setting
- Maximum value setting
- CW or CCW pointer movement selection

5.3.1 Start setup mode

The normally unused CAN 2 line is used as a set-up selector. Connect CAN 2-L (terminal 7) to CAN 2 GND (terminal 8) through an external switch and a 10 kΩ resistor.

When the switch closes, the indicator enters setup mode. The time the switch is closed is used to select the different settings. The time the switch is opened again is used to select and store new values.

Protection of setup

- Do not close the setup switch during the first 30 seconds after power-up. If the switch closes, the calibration function is disabled until the next power-up with the switch open.
- Calibration does not react to any input that is closed for less than 5 seconds.
- If the input is closed for more than 20 seconds, the calibration sequence stops without saving changes. You can start a new sequence only after the input is open for at least 5 seconds.

This prevents accidental short circuits from changing any setting. It prevents both short glitches and continuous short circuits.

NOTE A power loss during setup can cause an incorrect setup. If power is lost during setup, the process must be restarted.

5.3.2 Synchronise XL indicators over CAN

XL indicators that use the same CAN-ID will synchronise automatically. If the setup XL has the same CAN-ID as the other XL indicators in the system, they detect it. They then synchronise their settings with the setup XL.

5.3.3 Replacing indicators in a calibrated system

When an indicator is replaced in a calibrated system, the system has to be recalibrated.

5.3.4 Setup indicators without 360 ° scales

The indicator scale can be divided into two sections, minimum to zero and zero to maximum.

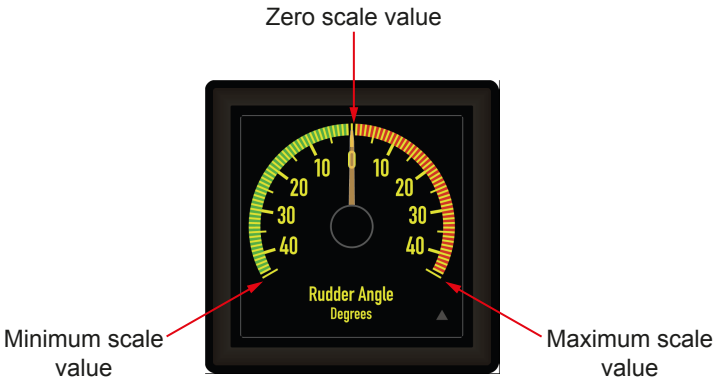

Set zero position

The sensor/input must be positioned at relevant zero value and on the indicator, the set-up switch must be closed:

1. After 5 seconds, the indicator pointer will move to 0 ° (just check, no action).
2. After 5 to 10 seconds, the new zero scale value is stored when the set-up switch is opened. The LED flashes once for verification.

NOTE When controlled by a processor, the switch close time must be between 5.5 and 9.5 seconds.

If no new value was stored (switch still closed), wait at least 20 seconds. Then the calibration sequence will be terminated without storing a new setting. The indicator pointer will move back to the scale position given by the present sensor/input value (normal mode).

Set minimum position

The sensor/input must be positioned at the relevant minimum value and on the indicator, the set-up switch must be closed:

1. After 5 seconds, the indicator pointer will move to scale zero (just check, no action).
2. After 10 seconds, it will move to maximum scale value (check, no action).
3. After 15 seconds, it will move to minimum scale value (check, no action).
4. After 10 to 15 seconds, the new maximum scale value is stored when set-up switch is opened. The LED flashes once for verification.

NOTE When controlled by a processor, the switch close time must be between 15.5 and 19.5 seconds.

If no new value was stored (switch still closed), wait at least 20 seconds. Then the calibration sequence will be terminated without storing a new setting. The indicator pointer moves back to the scale position given by the present sensor/input value (normal mode).

Set maximum position

The sensor/input must be positioned at the relevant maximum value and on the indicator, the set-up switch must be closed:

1. After 5 seconds, the indicator pointer will move to scale zero (just check, no action).
2. After 10 seconds, it will move to maximum scale value (check, no action).
3. After 10 to 15 seconds, the new maximum scale value is stored when set-up switch is opened. The LED will flash once for verification.

NOTE When controlled by a processor, the switch close time must be between 10.5 and 14.5 seconds.

If no new value was stored (switch still closed), wait at least 20 seconds. Then the calibration sequence will be terminated without storing a new setting. The indicator pointer moves back to the scale position given by the present sensor/input value (normal mode).

Changing pointer rotation

You can change the pointer rotation from the default CW to CCW. Place the input/sensor maximum value at scale minimum and the input/sensor minimum value at scale maximum. Do this by placing the input/sensor maximum value at scale minimum and the input/sensor minimum value at scale maximum.

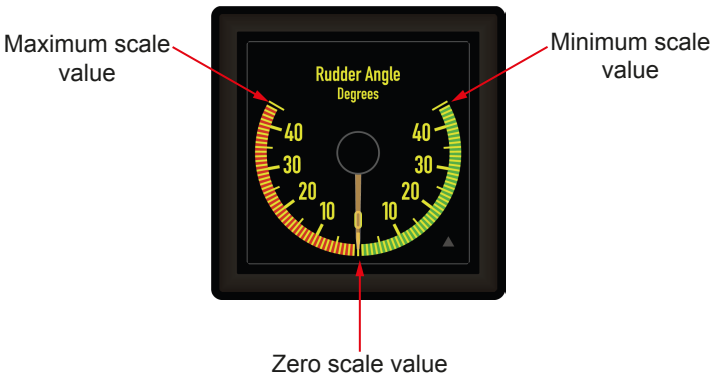

This applies to rudder indicators with a hanging pointer, as shown above. It also applies to systems that use the same sensor with a standing pointer, as shown earlier.

On both indicators, the shown rudder angle 45 ° port side (red) is set-up as maximum value. This will give the “standing” type CW pointer rotation and the “hanging” CCW pointer rotation.

5.3.5 Setup indicators with 360 ° scales

Set zero position

The sensor/input must be positioned at the relevant zero value and on the indicator, the set-up switch must be closed:

1. After 5 seconds, the indicator pointer will move to 0 ° (just check, no action).
2. After 5 to 10 seconds, the new zero scale value is stored when set-up switch is opened. The LED flashes once for verification.

NOTE When controlled by a processor, the switch close time must be between 5.5 and 9.5 seconds.

If no new value was stored (switch still closed), wait at least 20 seconds. Then the calibration sequence will be terminated without storing a new setting. The indicator pointer will move back to the scale position given by the present sensor/input value (normal mode).

Set CCW rotation

On the indicator, the set-up switch must be closed:

1. After 5 seconds, the indicator pointer will move to scale zero (just check, no action).
2. After 10 seconds, the pointer will present input values as CCW.
3. After 15 seconds, it will move to minimum scale value (check, no action).
4. After 10 to 15 seconds, CCW rotation value is stored when set-up switch is opened. The LED will flash once for verification.

NOTE When controlled by a processor, the switch close time must be between 10.5 and 14.5 seconds.

If no new value was stored (switch still closed), wait at least 20 seconds. Then the calibration sequence will be terminated without storing a new setting. The indicator pointer will move back to the scale position given by the present sensor/input value (normal mode).

Set CW rotation

On the indicator, the set-up switch must be closed:

1. After 5 seconds, the indicator pointer will move to scale zero (just check, no action).
2. After 10 seconds, the pointer will present input values as CCW.
3. After 15 seconds, the pointer will present input values as CW.
4. After 15 to 20 seconds, CW rotation value is stored when set-up switch is opened. The LED will flash once for verification.

NOTE When controlled by a processor, the switch close time must be between 15.5 and 19.5 seconds.

If no new value was stored (switch still closed), wait at least 20 seconds. Then the calibration sequence will be terminated without storing a new setting. The indicator pointer will move back to the scale position given by the present sensor/input value (normal mode).

5.4 Commissioning single and dual CANopen indicators

After power-up the LED is flashing once every second, and after two seconds the LED is turned off.

If the LED keeps flashing, there is no communication over both CANopen lines. If the microprocessor stops, the heartbeat signal on the CAN bus is interrupted, and the error LED keeps flashing.

The default setup of the CANopen is Baud rate 125 kbit/s. Alternatively, the Baud rate can be changed to 250 kbit/s. For further information regarding the CAN communication, please see the CAN specification manual at www.deif.com.

5.4.1 Termination of the CANopen line

To accomplish safe communication over the CANopen line, termination of the cable is very important (see the drawing below). Use a cable of the type twisted pair with screen. For example, 2 x 2 x 0, 50 mm2, for example, LIYCY-P from Solar.

The maximum length at Baud rate 125 kbit/s is 500 m, and 250 m at Baud rate 250 kbit/s.

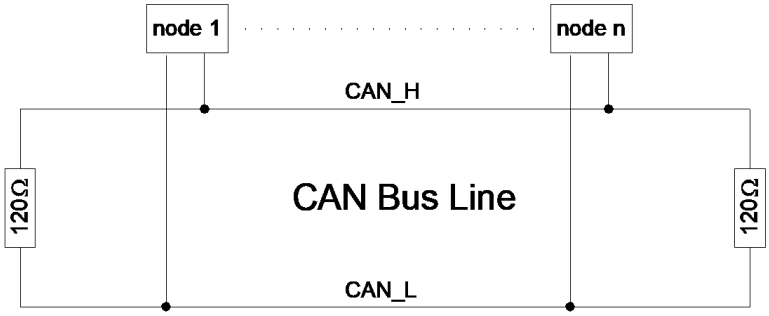

The cable screen must never be connected to earth. If noise interrupts the communication, connect the cable screen to terminal 5. If the system uses dual CAN, also connect it to terminal 8. Do this on all instruments in the loop. It is recommended that the two cable screens for CAN 1 and CAN 2 are not connected.

If the environment is very noisy (electrical noise), the below-mentioned arrangement can be used for enhanced EMC characteristics.

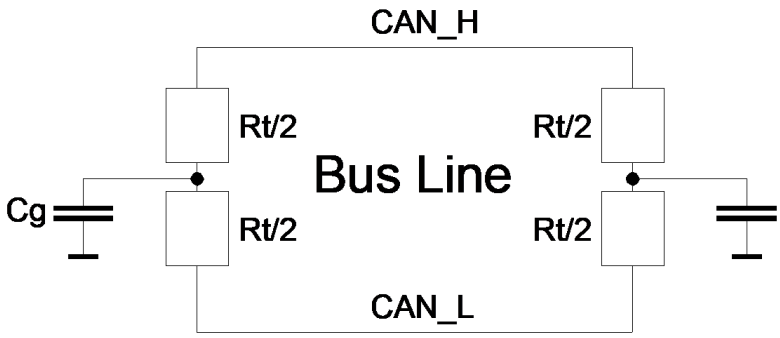

- Rt/2 = 60 Ω
- Cg = 10 to 100 nF

Connect the capacitor to a quiet ground level. For example, use the cable screen, and connect it to the GND input on each illuminator.

NOTE The capacitor must never be connected to any other ground, for example, the earth or the hull of the ship.

The example below shows how a CAN line different from a single line structure can be arranged. In the example a star topology with three branches is shown. To accommodate such a topology, the multiple termination concepts may be considered. Note the value of the used termination resistors.

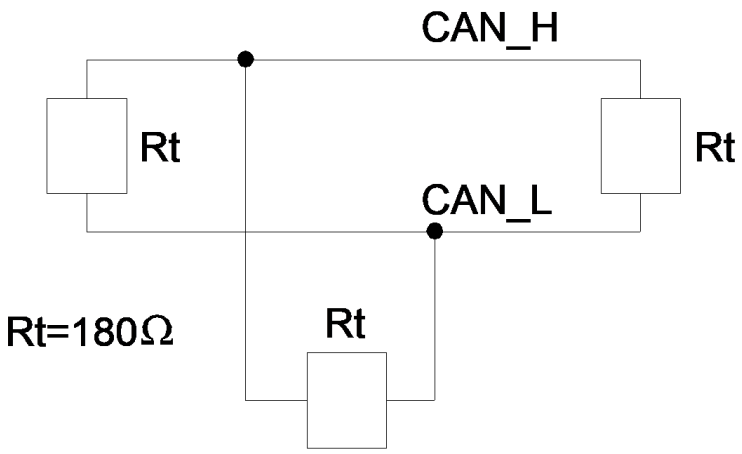

5.5 Error handling

5.5.1 Analogue 240 ° indicators

Indicator status	Error LED	Pointer	Notes
Power-up	Flashes two or three times	Random, then moving to actual value or error position	Pointer moves uncontrollably for a few seconds. This is normal operation.
Input within range	OFF	Actual reading	Normal state
Input out of range	OFF Flashes twice when re-entering normal state	In error position 2-3 ° outside scale arc in relevant side	Pointer stops at scale maximum/ minimum for two seconds and moves to error position.
Power-down (power off)	OFF	Moves to random position (not locked)	External PSU supervision is recommended.
Internal error (watch dog)	Continuous flashing	Random	Unit must be returned to DEIF for service.

5.5.2 Analogue 360 ° indicators

Indicator status	Error LED	Pointer	Notes
Power-up	Flashes two or three times	Random, then moving to actual value or error position	Pointer moves uncontrollably for a few seconds. This is normal operation.
Input within range	OFF	Actual reading	Normal state
Input out of range	Continuous flashing	Random, typically last valid reading	As no pointer position can be used as error, LED is flashing instead.
Power-down (power off)	OFF	Moves to random position (not locked)	External PSU supervision is recommended.
Internal error (watch dog)	Continuous flashing	Random	Unit must be returned to DEIF for service.

5.5.3 CAN 240 ° indicators

Indicator status	Error LED	Pointer	Notes
Power-up	Flashes two or three times	Random, then moving to actual value or error position	Pointer moves uncontrollably for a few seconds. This is normal operation.
Input within range	OFF	Actual reading	Normal state

Indicator status	Error LED	Pointer	Notes
Input out of range	OFF Flashes twice when re-entering normal state	In error position 5 ° outside scale arc in relevant side	Pointer stops at scale maximum/ minimum for two seconds and moves to error position.
Missing CAN	Continuous flashing	Moves to error position EM +180 °	
Power-down (power off)	OFF	Moves to random position (not locked)	External PSU supervision is recommended.
Internal error (watch dog)	Continuous flashing	Random	Recheck that this is not a CAN error. Unit must be returned to DEIF for service.

5.5.4 CAN 360 ° indicators

Indicator status	Error LED	Pointer	Notes
Power-up	Flashes two or three times	Random, then moving to actual value or error position	Pointer moves uncontrollably for a few seconds. This is normal operation.
Input within range	OFF	Actual reading	Normal state
Input out of range	Flashing	Random, typically last valid reading	As no pointer position can be used as error, LED is flashing instead.
Missing CAN	Continuous flashing	Moves to error position EM +180 °	Error position is also valid reading.
Power-down (power off)	OFF	Moves to random position (not locked)	External PSU supervision is recommended.
Internal error (watch dog)	Continuous flashing	Random	Recheck that this is not a CAN error. Unit must be returned to DEIF for service.

6. Appendix A: Pointer position examples

The pointer positions of the indicators at different inputs depend on the configuration of the indicator. The pointer positions in the example are for an analogue pitch indicator with a range of 4 to 20 mA. The pointer rotates in a clockwise direction when the indicator receives a positive input.

Table 6.1 Pointer positions based on input

Minimum value (4 mA)	Electrical middle (12 mA)	Maximum value (20 mA)

Table 6.2 Pointer error positions

Minimum	Electrical middle + 180 °	Maximum

7. Appendix B: Pointer positions based on input

7.1 Standard analogue indicators

Input type	Input 1	Input 2	Pointer position (scale)	STD design EM = 12 Pointer CW
4 to 20 mA	4 mA	-	-45	
0 to 10 V	0 V	-		
-10 to 0 to 10 V	-10 V	-		
4 to 20 mA	12 mA	-	0	
0 to 10 V	5 V	-		
-10 to 0 to 10 V	0 V	-		
4 to 20 mA	20 mA	-	+45	
0 to 10 V	10 V	-		
-10 to 0 to 10 V	10 V	-		

7.2 Rudder indicators

When used in a system with TRI-2, XL must be CCW, or TRI-2 must be 20 to 4 mA and XL CW.

XL 4 to 20 mA can be changed from CW to CCW by the customer. RT-2 can also be changed from CW to CCW during installation.

Input type	Input 1	Input 2	Pointer position (scale)	FWD design EM = 6 Pointer CCW1	AFT design EM = 12 Pointer CCW*
4 to 20 mA	-	4 mA	-45		
0 to 10 V	0 V	-			
-10 to 0 to 10 V	-10 V	-			
4 to 20 mA	-	12 mA	0	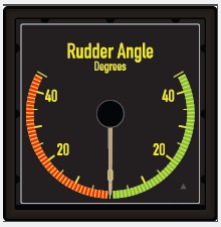	
0 to 10 V	5 V	-			
-10 to 0 to 10 V	0 V	-			

Input type	Input 1	Input 2	Pointer position (scale)	FWD design EM = 6 Pointer CCW1	AFT design EM = 12 Pointer CCW*
4 to 20 mA	-	20 mA	+45		
0 to 10 V	10 V	-			
-10 to 0 to 10 V	10 V	-			

NOTE * Make sure that the pointer rotation matches other indicators/transmitters in the system (TRI-2, RT-2, and so on).

7.3 Standard azimuth indicators

Input type	Input 1	Input 2	Pointer position (scale)	FWD design EM = 12** Pointer CW*	AFT design EM = 6** Pointer CW*
4 to 20 mA	4 mA	-	0	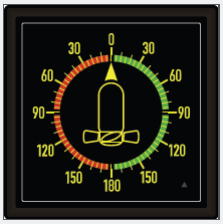	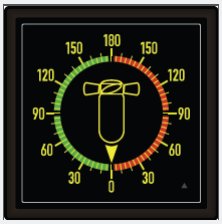
0 to 10 V	0 V	-			
-10 to 0 to 10 V	-10 V	-			
4 to 20 mA	8 mA	-	+90		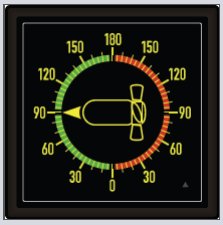
0 to 10 V	2.5 V	-			
-10 to 0 to 10 V	-5 V	-			
4 to 20 mA	12 mA	-	180		
0 to 10 V	5 V	-			
-10 to 0 to 10 V	0 V	-			
4 to 20 mA	16 mA	-	-90		
0 to 10 V	7.5 V	-			
-10 to 0 to 10 V	5 V	-			

NOTE * Make sure that the pointer rotation matches other indicators/transmitters in the system (RTA-602 and so on).
NOTE ** EM can be changed 180 ° (from 6 to 12 or 12 to 6) by turning the rear side adjustment potentiometer A.

7.4 Analogue SIN/COS azimuth indicators

Input type	Input 1	Input 2	Pointer position (scale)	FWD design EM = 12** Pointer CW*	AFT design EM = 6** Pointer CW*
4 to 20 mA	12 mA	4 mA	0 (A)	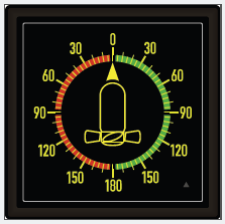	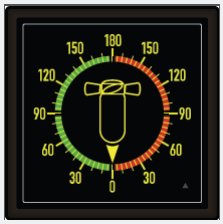
0 to 10 V	5 V	0 V			
-10 to 0 to 10 V	0 V	-10 V			
4 to 20 mA	4 mA	12 mA	+90 (B)		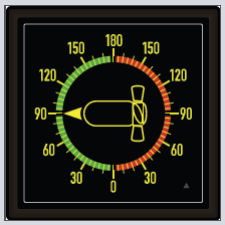
0 to 10 V	0 V	5 V			
-10 to 0 to 10 V	-10 V	0 V			
4 to 20 mA	12 mA	20 mA	180 (C)		
0 to 10 V	5 V	10 V			
-10 to 0 to 10 V	0 V	10 V			
4 to 20 mA	20 mA	12 mA	-90 (D)		
0 to 10 V	10 V	5 V			
-10 to 0 to 10 V	10 V	0 V			

NOTE * Make sure that the pointer rotation matches other indicators/transmitters in the system (RTA-602 and so on).
NOTE ** EM can be changed 180 ° (from 6 to 12 or 12 to 6) by turning the rear side adjustment potentiometer A.
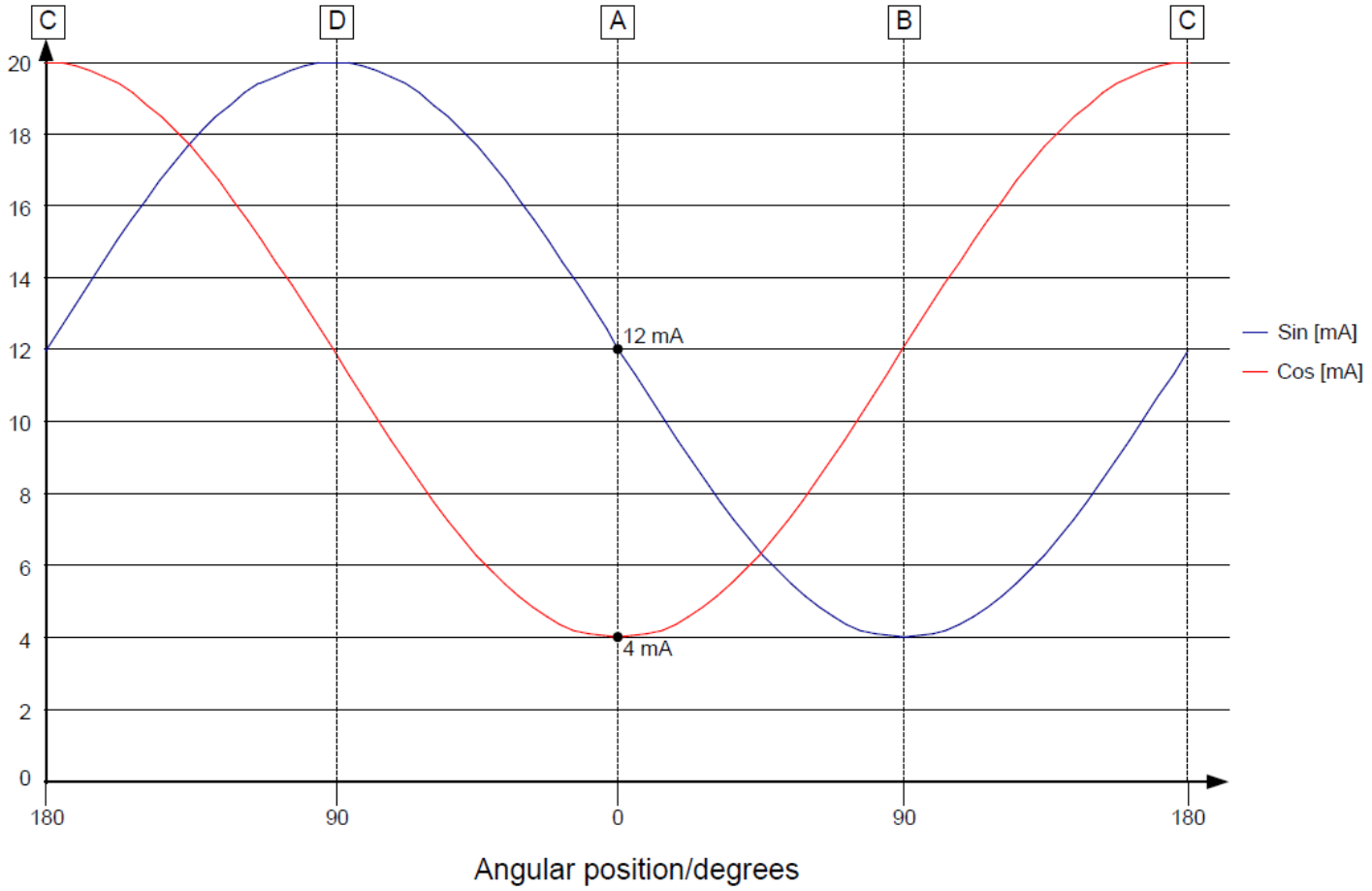
Steering Angle Feedback signals