XDi

4921250067-I

fleXible Display indicators

Data sheet

DEIF Marine Instruments

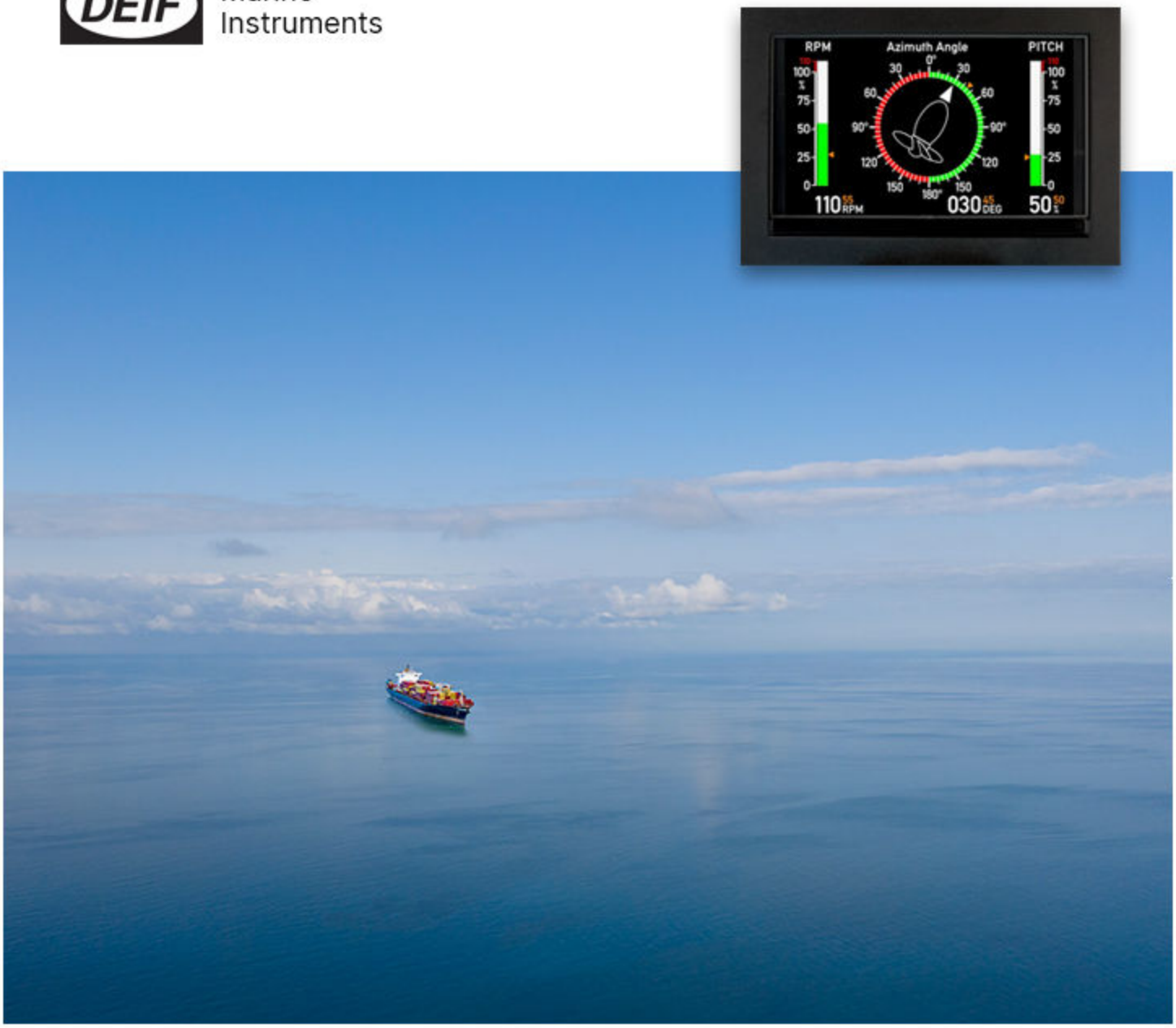

1. General description

1.1 New technology 4
1.2 Compatibility 4

2. Products and variants

2.1 Product range 6
2.2 XDi features 6
2.3 XDi in marine applications 8
2.3.1 XDi as universal spare part 9
2.3.2 End of life, disposal of XDi 9

3. Options and accessories

3.1 Availaible options 10
3.2 Snap-on extension modules 10
3.2.1 AX1 analogue input module 10
3.2.2 DX1 digital I/O module 10
3.2.3 NX1 NMEA output extension module 11
3.2.4 NX2 NMEA communication extension module 11
3.3 Watertight IP66 front option (only as option) 11
3.4 Dual 5-pole terminal connectors 11
3.5 Front frame without buttons 11
3.6 Front frame with 4 buttons (accessory only) 12

4. Technical specifications

4.1 Details 13
4.2 AX1 analogue module 15
4.3 DX1 digital I/O module 16
4.4 NX1 NMEA output module 17
4.5 NX2 NMEA I/O module 18
4.6 Lifetime and backlight intensity 18
4.7 XDi connections 19
4.7.1 AX1 Analogue extension module connections 20
4.7.2 DX1 Digital extension module connections 21
4.7.3 NX1 NMEA output module connections 21
4.7.4 NX2 NMEA input/output module connections 22
4.7.5 USB service port 22
4.8 Unit dimensions 22
4.8.1 XDi 96 23
4.8.2 XDi 96 + module 24
4.8.3 XDi 144 24
4.8.4 XDi 144 + module 25
4.8.5 XDi 192 25
4.8.6 XDi 192 + module 26
4.9 Product label 26
4.9.1 Warranty label 26
4.10 Warranty conditions 26

5. Ordering information

5.1 Standard variants 27
5.2 Available options 27
5.3 XDi accessories 2951260090 28
5.4 Order specifications 29

5.4.1 Product variants 29
5.4.2 Example 29
5.4.3 Disclaimer 29

1. General description

- Type XDi 96, XDi 144, XDi 192
- Dual, Multi and Nav variants
- Store all your indicators in one single XDi
- Class approvals

1.1 New technology

The XDi product range represents a completely new way of thinking illuminated bridge indicators. The XDi range has inherited all the well-known DEIF qualities in the XL product line and brings them to the next level! With two CAN bus ports as standard and extension modules for analogue, digital or serial data interface, the XDi series offers a very high degree of installation flexibility.

The XDi-net plug and play protocol built on top of CANopen makes it very easy to utilise the CAN bus interfaces for sharing external dimmer and indicator data between XDi indicators in a system.

The use of predefined setup profiles (PP and VS) reduce the installation complexity to a few selections,guided by a wizard, in the normal installation and commissioning situation.

The unique XDi base master functions allow for a very advanced system integration with fully automated indicator selection and configuration via the CAN bus. The automated configuration can even be extended to support automatic configuration of a service XDi unit from a central CAN controller in the system.

A high quality display replaces the mechanical scale and pointer combination. Multiple indicators are stored in the memory of the XDi and can be selected, adjusted and locked during installation.

The XDi is delivered with a preinstalled indicator library containing a selection of virtual indicators and setup profiles.

DEIF provides a number of free standard libraries for different applications and offers a customisation service to adapt the XDi virtual indicators to fit your graphical design line and special application needs.

Please download the technical document: “XDi-Standard virtual indicator library 4189350067 UK” to get the updated information of available standard libraries and customisation possibilities.

Standard libraries or your own customised libraries are available for download from a DEIF server and can be uploaded to a new library using the USB service port.

The XDi series is type-approved for marine bridge applications and MED-certified (wheel-marked).

Approvals and certificates are available on www.deif.com.

To secure compliance with relevant standards and obtained approvals, customisation of indicators can only be made by DEIF.

1.2 Compatibility

This flexibility is not only heading forward. As always, DEIF strives to make long-lasting solutions for our customers. The new XDi range can easily be integrated with our current XL range.

For outdoor applications in an XDi system,the very robust BRW-2 indicator is recommended. If space is limited, BW144 or BW192 can also be used and for outdoor panel mounting,a standard XL with IP66 option is recommended.

Wind measuring systems

The XDi-N Navigation version with preinstalled standard wind indicator library and the NX2 NMEA extension module is fully compatible with all DEIF wind sensors of type WSS.XDi-N is not compatible with the rather old DEIF 879 type mechanical wind sensor.

This XDi-N wind configuration will also work well with other manufacturer's wind sensors using the standard NMEA0183 interface (IEC 61162-1).

An XDi-N configured as wind indicator can replace the WSDI-2, but be aware that the physical dimensions and panel cut-out are quite different.

2. Products and variants

2.1 Product range

The XDi product range consists of three performance versions optimised to offer the best price/performance ratio.

These are listed below and can be seen in the table:

- XDi Dual - can handle one or two data inputs and indicators with single or dual indication.
- XDi Multi - can handle up to 12 inputs dependent on the indicator design and application.
- XDi Nav - is the top model, handles multi-inputs and has a number of special functions for navigation data presentation.

XDi 96 Dual	**XDi 144 Dual**	**XDi 192 Dual**
XDi 96 Multi	**XDi 144 Multi**	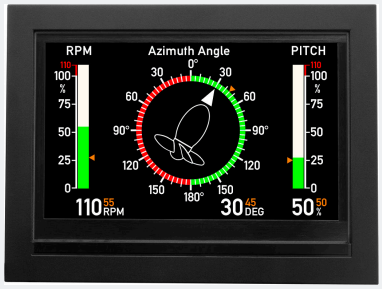 **XDi 192 Multi**
XDi 96 Nav	**XDi 144 Nav**	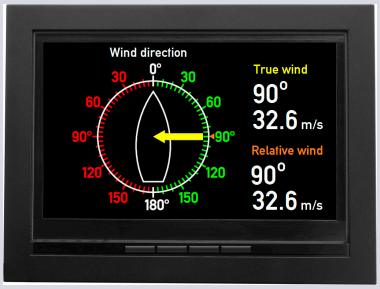 **XDi 192 Nav**

NOTE XDi Single indication is supported by the dual version.

2.2 XDi features

Compared to traditional illuminated indicators, the XDi series offers very high accuracy and a number of new features.

The following features can be designed into any XDi virtual indicator:

- Present one or multiple data types on one virtual indicator screen
- Present one or more headlines, for ex. starboard rudder (select from list or write a new)
- Analogue pointer or bar graph indication
- Support for two pointers respectively actual and set point (commanded) data

- Combine analogue and digital data presentation
- Present critical band on the indicator scale, configurable from the installation menu
- Make colour change of pointer, bar or digital figures when data value is entering a critical band
- 3-level dynamic graphical pointer, for example azimuth pointer with thrust direction indication
- Graphical design for optimal day/night view or even day/dusk/night view in customised indicators
- XDi-net input for easy plug and play system integration and configuration (CAN1, CAN2 or both)
- Configurable CANopen TPDO or RPDO input (CAN1, CAN2 or both)
- CANopen multiplexed PDO (DAM-MPDO) input
- Configurable analogue voltage, current or potentiometer inputs (requires AX1 extension module)
- Configurable input for direct connection of one or two RPM pickups (requires DX1 extension module)
- Output-scaled analogue or digital input data via XDi-net (or CANopen TPDO/RPDO)
- Relay output when data value enters a critical band (requires DX1 extension module)
- Output of indicator data as NMEA0183serial data (IEC 61162-1) for VDR interfacing

The listed indicator features must be designed in the virtual indicator to be available and functioning.

The implementation of features depends on the XDi performance class, the type of virtual indicator and the intended system application.

The input and output features with default parameters are predefined in the virtual indicator setup profile (VS).

For each indicator, up to 50 different VS profiles can be created, each handling a predefined input/output configuration.

To learn more, please download: “XDi designers handbook 4189350049 UK” and “XDi-net CANopen reference manual 4189350066 UK” from www.deif.com.

The XDi-N Navigation version offers the following features in addition:

- Supports presentation of special navigation data types like: heading, GPS position, time and WP information and standard data like depth, speed, rate of turn, bearing, wind speed and direction
- Special analogue heading indicators
- Indicator design with up to 4 predefined mode screens in one virtual indicator
- System-wide indicator mode control using up to 9 configurable mode groups
- Supports virtual indicators with selectable data units controlled by the active unit profile
- Three configurable unit profiles
- Local or system wide unit profile shift
- Mode and unit profile shift via XDi-net or CANopen TPDO or RPDO
- Support indicator with the data source fall-back function implemented. If primary source fails, the secondary source takes over.
- Push-buttons on the front for easy operation (optional: without buttons for ex. in overhead panels)
- NMEA serial data input for indicators (requires NX2 extension module)
- Semi-automatic or manual NMEA interface setup (requires NX2 extension module)
- Internal calculation of true wind relative to ship and true wind geographic (relative to north)
- Internal calculation of magnetic or true heading, course or bearing (magnetic variation required)

Details about the special XDi-N functions can be found in the XDi designers handbook.

Dimmer and day/night function

For marine bridge application, the ability to dim the backlight is very important.

The XDi series supports a number of ways to dim the display backlight and control the day/night (day/dusk/night) shift. The dimming type and default parameter settings are predefined in a Product Profile (PP).

Dimmer control functions that can be used in a product profile:

- CAN bus using XDi-net protocol (CAN1, CAN2 or both)
- CAN bus using CANopen TPDO or RPDO
- CAN bus using CANopen multiplexed PDO (DAM-MPDO)
- Front buttons up, down with repeat (requires front button kit for XDi-D and -M)
- Fixed dimmer level (often used in engine control room)
- Analogue dimmer input either voltage or potentiometer (requires AX1 extension module)
- External push-button input – up, down with repeat (requires DX1, NX1or NX2 extension module)
- NMEA serial data input (requires NX2 extension module)

Indicator day/night or day/dusk/night colour shift functions that can be used in a product profile:

- Automatic day/night (day/dusk/night) shift at a given dimmer level, for example shift to night colour when the dimmer level is set below 70%.
- Fixed colour (either day or night (or dusk))
- Controlled via CAN bus using XDi-net protocol (CAN1, CAN2 or both)
- Controlled via CAN bus using CANopen TPDO or RPDO
- Controlled via CAN bus using CANopen multiplexed PDO (DAM-MPDO)
- Front button –double-push on dimmer buttons to toggle colour(see dimmer control above)
- External push-button input – up, down with repeat (requires DX1, NX1 or NX2 extension module)
- NMEA serial data input(requires NX2 extension module)

An XDi virtual indicator library may contain up to 50 Product Profiles (PP) with predefined dimmer and colour shift settings in addition to default communication setup and other product-related settings.

Remote control

Any XDi on the CAN bus can be setup and remote-controlled via CANopen SDO communication.

Dimmer level, day/(dusk)/night colour,unit profile shift and mode shift can also be controlled using simple XDi-net commands.

Remote operation of XDi is also possible using eternal push-buttons connected to the contact input on a NX1 or NX2 extension module (digital inputs on DX1 may also be used). The external push-buttons can be configured to act as if they were connected in parallel with either front button 2 or 3, making remote push-button dimming available or front button 1 and 4 that will allow indicator mode toggle and opening of the user menu. If 4 external push-buttons are connected to the XDi, a full external push-button operation is obtained.

2.3 XDi in marine applications

During installation, a pre-defined virtual indicator is selected from the installed XDi virtual indicator library.

At power up, the XDi will present a setup wizard guiding you through the first time setup, step by step.

The wizard contains the following steps:

1. Select CAN node ID; all units must be assigned a unique ID.
2. Select a Product Profile (PP) that contains the CAN system settings and the default dimmer settings.
3. Select the Virtual Indicator (VI)
4. Select the VI-setup profile (VS) defining the input/output configuration for the selected indicator.
5. Finalise setup or enter a menu to make adjustments.

When the installation is completed, the XDi will act as a fixed illuminated indicator, presenting one or more working parameters of the ship's mechanisms and devices. These are parameters such as: rudder angle, RPM and pitch of a controllable pitch propeller, RPM and direction of rotation and fixed propeller, engine RPM, azimuth angle, rate of turn, propulsion system load, power consumption, temperature, pressure, speed and fuel consumption.

All XDi versions can also present standard navigation data like heading angle, bearing, distance, depth, speed, rate of turn, wind speed and angle or direction and more.

In addition, the XDi-N supports in addition presentation of special navigation data types like: GPS position, date, time and WP information.

2.3.1 XDi as universal spare part

Traditional spare indicators are impractical. With XDi and a shared indicator library, carrying all indicators becomes practical. With XDi, one indicator of each physical size used on board can replace any of the installed indicators. If the XDi is fully integrated in a system where the CAN controller utilises the XDi base master functions, a fully automated setup can be achieved after replacement.

2.3.2 End of life, disposal of XDi

This equipment is not to be disposed of in normal waste. It is to be handled in accordance with applicable waste disposal regulations in the country where the equipment is used.

3. Options and accessories

3.1 Availaible options

This chapter describes the available options that can be ordered together with the XDi main unit.

If nothing else is mentioned in the option description, the option will also be available as an accessory that can be ordered separately.

3.2 Snap-on extension modules

The options are add-on functionality to the basic standard unit. The standard double CAN interface can be extended by analogue, digital or NMEA input/outputs by adding one or two extension modules.

The XDi 96 has one extension slot. The XDi 144 and XDi 192 have two slots.

The selected product profile (PP) or virtual indicator setup profile (VS) must support the attached extension module for it to work. The default configuration of inputs and outputs can be changed and adjusted via the XDi menu system.

XDi with two extension modules mounted

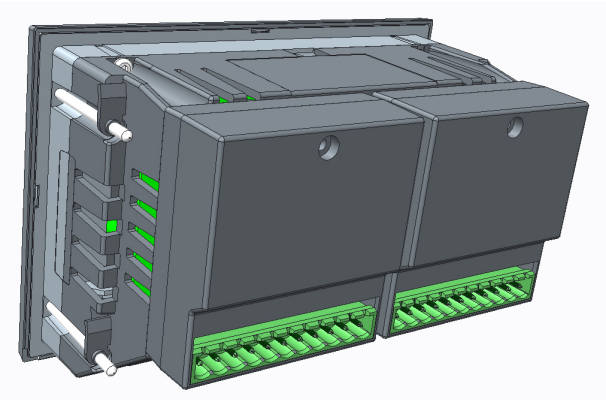

3.2.1 AX1 analogue input module

The AX1 module contains two separate configurable inputs and a third voltage input often used as analogue dimmer input.

The two standard inputs can be configured as current, voltage or potentiometer inputs, either as two stand-alone inputs or as an input pair for SIN/COS potentiometer.

The module provides a reference voltage output that may be used as supply voltage for a potentiometer.

When a voltage input is configured as a potentiometer input using the reference voltage outputas supply, the XDi automatically measures the reference voltage and compensates for fluctuations. This function can even work with an external reference voltage overwriting the reference voltage, for example a 24 V supply in a 3-wire solution.

The measured data values from the analogue inputs can be shared on XDi-Net or standard CANopen for other indicators to use.

3.2.2 DX1 digital I/O module

The module contains two separate digital inputs and two relay outputs.

A predefined function for this module is RPM measurements by connecting one or two inductive pickup sensors (or similar pulse sensors), the calculation of RPM will be made either direction-independent (one sensor) or direction-dependent (two sensors).

The digital inputs can also be configured as an external push-button interface for dimmer control.

In customised libraries, the digital inputs can be configured for other applications like frequency or simple on/off detection.

The relay output makes it possible to define two outputs from the indicator, triggered by the selected indicator.

3.2.3 NX1 NMEA output extension module

The module contains one serial data output compliant with NMEA0183 (IEC61162-1).

The data shown on the XDi dual or multi indicator can be transmitted in standard NMEA format to the ship's VDR or integrated navigation system.

DEIF standard libraries support the NX1 module where it is relevant.

The NX module has 2 contact inputs with internal pull-up resistors suitable for connection of 2 external push-buttons. In the standard XDi, they can be used for external push-button dimmer.

In the navigation version, the contact inputs can be configured for either dimmer control (same function as front push-button 2 and 3) or toggle VI mode/quick menu operation (same function as front push-button 1 and 4).

3.2.4 NX2 NMEA communication extension module

The NX2 module contains two standard opto-insulated NMEA0183 inputs and one standard NMEA0183 output (all according to IEC61162-1).

One RS-485 serial port configurable as input or output that uses NMEA0183 data format. DEIF wind sensors must be connected to this port. Remember to activate the 120 Ω termination.

Also this NX module has 2 contact inputs with the same function as described above.

The NX2 module is fully supported by the XDi-N version. Limited NMEA input functionality may be available for special customised applications.

3.3 Watertight IP66 front option (only as option)

The XDi may be ordered with the IP66 option pre-installed, in which case it can be mounted in a panel and be protected from front to IP class 66.

Please note that the XDi is however not intended for outdoor use.

3.4 Dual 5-pole terminal connectors

Dual terminal connectors are an alternative type of plug, for the two CAN/supply ports, where each connector has two separate cable entries; this option makes it easy to daisy-chain multiple indicators on the same CAN bus.

Dual terminals can be ordered with either screw terminals or spring terminals.

3.5 Front frame without buttons

Standard front frame mounted as standard on the XDi Dual and Multi versions.

If you want to have your XDi product branded on the front, a small batch of front frames can be ordered as accessory and you can have your logo printed locally. This is often the most cost-effective solution.

The XDi Navigation version comes with 4 push-buttons on the front as standard, but if buttons are not needed or maybe not desirable, the Navigation version can be ordered without the front buttons.

3.6 Front frame with 4 buttons (accessory only)

The XDi Navigation version comes with 4 push-buttons on the front as standard.

If the XDi Dual or Multi is set up to use front button dimming, the kit containing the front frame with 4 push-buttons can be ordered as accessory.

Logo printing as mentioned above is of cause also possible using this front frame version.

4. Technical specifications

4.1 Details

Indicators are designed according to the standards below.		Standards
Indicator accuracy	Analogue scale: Less than or equal to ± 1 pixel, accuracy depends on scale length. No parallax error on analogue indicators Digital readout: Less than or equal to ± 1 of least significant digit (rounding of input data is used)	
Interface	1st CAN interface with primary power connection	
	2nd CAN interface with secondary power connection	
CAN protocol	CANopen protocol XDi-Net protocol based on CANopen A pre-defined way of using the manufacture-specific part of CANopen into an easy-to-use plug and play solution. A few CANopen limitations apply when XDi-net is active. 1. Single CANopen/XDi-net 2. Two independent CANopens/XDi-nets 3. Redundant CANopen/XDi-net Customised CANopen setup can be implemented in a custom library.	
Auxiliary supply	Two double diode separated auxiliary supply inputs 24 V (18.0 to 31.2 V DC)	
Auxiliary voltage monitoring	Auxiliary voltage monitoring can be activated for both inputs. A pop-up warning will be seen on the display if the auxiliary voltage drops below 18 V (17.6 V to 18.6 V).	
Auxiliary power consumption	No extension modules: XDi 96 less than 3 W XDi 144 less than 4 W XDi 192 less than 6 W	
	1 extension module: XDi 96 less than 4 W XDi 144 less than 5 W XDi 192 less than 7 W	
	2 extension modules: XDi 96 not possible XDi 144 less than 6 W XDi 192 less than 8 W	
	Power consumption is with backlight at 100 %.	
Connections	Standard: Pluggable screw terminals: 0.2 to 2.5 mm^2 Optional: Pluggable dual spring or screw terminals: 0.2 to 2.5 mm^2	
Termination (CAN)	Switchable termination resistor (120 Ohm) on each CAN port is built-in. Default: OFF	
Galvanic separation	500 V between Aux1/Aux2, CAN1 and CAN2	

Indicators are designed according to the standards below.				Standards
Display: High quality wide-angle TFT				Levels can be adjusted to match.
Type	XDi 96	XDi 144	XDi 192	
Resolution	QVGA 320 x 240	WVGA 800 x 480	WVGA 800 x 480	
Colour depth	18-bit	24-bit	18-bit	
Contrast ratio	800	500	1000	
Brightness	600	350	500	
Mounting	Front-mounted design, with removable front frame			
Panel mount	XDi can be mounted in panels from 1 to 32 mm thickness			
Window	Anti-glare and UV-resistant material			
Housing	Fire-resistant plastic blend			UL94 V0
Compass safety distance	Less than 0.3 m			IEC/EN 60945
Error indication	When an internal error is present, the display is dimmed black. External errors: Indication on display			GL rules
Protection	From front IP52 from rear IP20			IEC/EN 60529
	IP66 from front when XDi is ordered with IP66 option installed. Please note that the XDi is designed for protected environment and is not intended for unprotected outdoor use.			
Climate	Maximum 95 % RH: Maximum 30 days per year Maximum 85 % RH: Remaining days Maximum 75 % RH: Average per year Short-term condensing allowed			IEC/EN 60068-2-30, test Db
Temperature	Operating: -25 to +55°C Storage: -30 to +80°C			IEC/EN 60068-2-1 Cold IEC/EN 60068-2-1 Dry heat
Extended temperature test	Panel-mounted equipment 70°C, 16 hours (more related to devices mounted in a panel)			IACS E-10 Note 1 and DNV Class B
Panel influence	The accuracy is affected neither by the material nor by the thickness of the panel			IEC/EN 60051
Mechanical shock test	18 x 50 g half sine (11 ms)			IEC/EN 60068-2-27, test Ea
Vibration test	3 to 13.2 Hz: 2 mm (peak-peak) 13.2 to 100 Hz: 0.7 g			IEC/EN 60068-2-6 IEC/EN 60945 DNV Class A
Extended vibration test	Relevant for engine applications 3 to 25 Hz 3.2 mm (peak-peak) 25-100 Hz: 4.0 g			IEC/EN 60068-2-6 DNV Class B
Safety	300 V: Category III pollution deg. 2			IEC/EN 61010-1
EMC	CE-marked for industrial and marine environment			EN 61000-6-2 EN 61000-6-4 IEC/EN 60945

Indicators are designed according to the standards below.			Standards
Weight	XDi 96	250 g	
	XDi 144	375 g	
	XDi 192	550 g	

4.2 AX1 analogue module

AX1 analogue module	Configurable current, voltage, or potentiometer input		
Analogue inputs	Two analogue voltage or differential current inputs can be set up as two separate inputs or as a sin/cos input pair. One voltage input for analogue dimmer or a third indicator input Voltage inputs can be configured as potentiometer input		
Analogue input types	**Input type**	**Analogue 1**	**Analogue 2**
	Single input	Input 1	Input 2
	sin/cos	sin input	cos input
	Potentiometer	Wiper in (see info below)	Free
Analogue input range	**Input type**	**Maximum range**	**Input resistance (R in)**
	Current HI	± 20 mA	Maximum 65 Ω (incl. current protection circuit).
	Current LI	± 2 mA	1 kΩ (± 0.5 %)
	Voltage LV	± 2 V	
	Voltage HV or Dim	**Maximum range**	
	Range 1	± 7.5 V	112.5 kΩ (± 0.5 %)
	Range 2	± 15 V	
	Range 3	± 30 V	
	Range 4	V_{ref} mode	
Dimmer voltage input (Dim/HV3)	Single voltage input with reference to analogue common (AGND).		
		Maximum range	**R in**
	Dimmer voltage	0 to 30 V	112.5 kΩ (± 0.5 %)
	Voltage input HV3	-30 V to 0 to 30 V	112.5 kΩ (± 0.5 %)
	Can be configured as a potentiometer input using V_{ref} as supply (see note).		
Potentiometer input function	When a linear potentiometer is used as source for a HV input, the internal input resistance (112.5 kΩ) will affect the linearity of the measurement. The potentiometer resistance value can be inserted in VS profile or set up via menu, and the XDi will compensate for this inaccuracy (maximum 50 kΩ).		
V_{ref} Reference voltage output/input	Output: fixed +7.3 V (+7 V to +7.5 V) DC maximum 10 mA, the output may be used to drive a potentiometer less than or equal to 1 kΩ. The voltage on the V_{ref} terminal is continuously measured by the built-in ADC and in V_{ref} mode, a HV input will be automatically scaled relative to the measured V_{ref}. The V_{ref} voltage can be overwritten by an external voltage in the range 8 to 30 V DC and the auto scaling will still work and even compensate for voltage fluctuations. The reference voltage mode is excellent for high accuracy linear potentiometer measurements.		
Accuracy	Better than class 0.5 Less than +/- 0.5 % at 15 to 30°C Less than +/- 1.0 % at -25 to +70°C Accuracy is in % of the selected input measuring range		

AX1 analogue module	Configurable current, voltage, or potentiometer input
Linearity	High voltage input: Maximum +/- 0.4 %. Typical: Less than +/- 0.15 % Current inputs: Maximum: +/- 0.5 %. Typical: Less than +/- 0.15 % Linearity deviation is in % of the selected full input range and at constant room temperature.
Analogue calibration	The virtual indicator setup profile (VS) for the analogue inputs are typically created with 2- or 3-point linearisation. This makes it possible to compensate for internal and external inaccuracies in the analogue system. Special VS profiles can be designed with up to 7-point linearisation of the analogue input signal.
Environmental	Same as the main XDi unit.
Response time	Sample rate: default 100 ms (configurable in steps from 50 ms to 1000 ms). Filter: selectable running averaging over 1 to 100 samples (default 10).
Galvanic separation	500 V between all analogue inputs and XDi main unit.
Power consumption	Added power consumption of the XDi for each module: when module is mounted: Pin less than 1 W

4.3 DX1 digital I/O module

DX1 digital module	Configurable digital input and relay output		
Digital inputs	Two digital inputs can be set up as two separate inputs or as an input pair. The threshold can be selected via software.		
Digital input types	**Input type**	**Digital 1**	**Digital 2**
	Two general purpose digital inputs	Input 1	Input 2
	General purpose digital input pair	MSB	LSB
	Remote push-button control pair	Button 1 and 4 or 2 and 3	
	Dimmer control	Up	Down
	Two single RPMs (one direction)	RPM 1	RPM 2
	Single RPM forward & reverse	RPM+ (Ahead)∗	RPM- (After)∗
Input characteristics	Maximum voltage input range	0 to 32 V	
	LP input filter 3dB frequency	2 kHz	
	Input current to drive opto-insulation I_{in}		
	Range 1	I_{in} less than 4 mA at 5 V	
	Range 2	I_{in} less than 5.5 mA at 12 V	
	Range 3	I_{in} less than 9 mA at 24 V	
	Range 4	I_{in} less than 11 mA at 32 V	

DX1 digital module	Configurable digital input and relay output		
Input threshold and hysteresis		**Threshold**	**Hysteresis**
	Range 1	Typ. = 3.4 V (3.0 V - 3.8 V)	10 % (7 % - 14 %)
	Range 2	Typ. = 7.6 V (6.6 V - 8.6 V)	21 % (16 % - 27 %)
	Range 3 (default)	Typ. = 11.9 V (10.4 V - 13.7 V)	24 % (20 % - 30 %)
	Range 4	Typ. = 16.1 V (14.1 V - 18.6 V)	26 % (21 % - 32 %)
	Limits within the operating temperature range are indicated in brackets.		
Input protection	Maximum input voltage: +/- 32 V DC		
Relay output	Two independent relays		
Relay type	3 contact terminals/change-over contact.		
Contact rating	Switching voltage less than 60 V DC Switching power less than 30 W DC resistive load Switching current: 1 mA to 1 A		
Durability	Mechanical minimum 5.000.000 operations. Electrical minimum 100.000 operations at 24 V/1 A. The electrical durability of the relay is dependent on the load on the relay contacts.		
Relay coupling	Software configurable for either Normally Energised (NE) or Normally De-energised (ND).		
Environmental	Same as the main XDi unit.		
Galvanic separation	500 V between Din1, Din2, Dout1, Dout2 and XDi main unit.		
Power consumption	Added power consumption of the XDi for each module: P_{in} less than 1 W (both relays activated).		

* RPM(+) will give a positive RPM value if ahead of RPM(-).

4.4 NX1 NMEA output module

NX1 NMEA output module	Configurable digital input and relay output	
Serial interface settings	TX1 (default settings)	Setup according to IEC 61162-1: Bit rate: 4800 Data bits: 8 (D7 = 0), Parity: none Stop bits: 1
	Available bit rates	4800, 9600, 19200 or 38400 bps
NMEA output TX1 (TX3)	Output voltage	Minimum ± 4 V at 1 kΩ load (=1 NMEA input load) Minimum ± 2.5 V at 100 Ω load (=10 NMEA input loads)
	NMEA input loads	Maximum 10 standard NMEA inputs should be connected in parallel to one NMEA output.
Contact input	Push-button input with internal pull-up resistor to +5 V, activated by potential free contact to common.	

NX1 NMEA output module	Configurable digital input and relay output
Environmental	Same as the main XDi unit.
Galvanic separation	500 V between: RX2/TX2/TX1/C-IN1/C-IN2/Common and XDi main unit. 1 kV between RX1 and RX3 or any other terminal. (IEC 60845 6.4 and IEC 61182-1).
Power consumption	Added power consumption of the XDi for each module: when module is mounted: Pin < 1 W.

4.5 NX2 NMEA I/O module

NX2 NMEA I/O module	Configurable digital input and relay output		
Serial inputs	Two serial inputs. One output and one RS-485 input/output port The RS-485 port can be configured as either an input or an output		
Input types	**Input/output**	**Type**	**Protocol/function**
	RX1	RS-422 opto-insulated input	NMEA0183
	RX3	RS-422 opto-insulated input	NMEA0183
	RX2/TX2	RS-485 differential I/O	NMEA0183
	TX1	RS-422 differential output	NMEA0183
	C-IN 1 & 2	Contact input	Push-button simulation
Serial interface settings	RX1 and TX1 RX2 and TX2 RX3 (default settings)	Setup according to IEC61162-1: Bit rate: 4800 Data bits: 8 (D7 = 0), Parity: none Stop bits: 1	
	Available bit rates:	4800, 9600, 19200 or 38400 bps	
NMEA input RX1 and RX3	Input voltage	Minimum +/-1.8 V	
	Input load	Less than 0.7 mA at 2 V input voltage (2.8 kΩ)	
	Input over-voltage	15 V infinite 30 V for maximum 15 seconds	
NMEA output TX1 (TX2)	Output voltage	Minimum ± 4 V at 1 kΩ load (=1 NMEA input load) Minimum ± 2.5 V at 100 Ω load (=10 NMEA input loads)	
	NMEA input loads	Maximum 10 standard NMEA inputs should be connected in parallel to one NMEA output.	
Contact input	Push-button input with internal pull-up resistor to +5 V, activated by potential free contact to common.		
Environmental	Same as the main XDi unit		
Galvanic separation	500 V between: RX2/TX2/TX1/C-IN1/C-IN2/Common and XDi main unit. 1 kV between RX1 and RX3 or any other terminal (IEC 61162-1)		
Power consumption	Added power consumption of the XDi for each module: when module is mounted: Pin less than 1 W		

4.6 Lifetime and backlight intensity

The XDi product line is designed for long operational lifetime.

The LCD and LED backlight are the long-life type made for demanding industry applications, but despite that, the backlight level will decay over time. The decay rate depends on the average backlight level used during operation.

If the backlight is at maximum all the time, the backlight level is reduced to not less than 50 % after 4½ years at an average indoor temperature of 20ºC.

By reducing the backlight level to 90 %, the decay to 50 % backlight level will not appear until after more than 6 years.

Therefore, it is recommended to adjust the backlight level to the lowest acceptable level for the actual use of the indicator.

To illustrate this, the following examples can be considered:

- The XDi is used below deck in the engine control room with a fixed backlight level. Reducing the backlight level from 100 % to a fixed 70 % level will increase the 50 % decay time to more than 10 years.
- During normal operation on the bridge, where the indicator is used with full backlight during daytime (8 hours) and then dimmed down during dawn and dusk (8 hours) and even further during night (8 hours), the 50 % decay time will be extended to more than 9 years.

Since the backlight level may vary slightly from unit to unit and since it will decay over time, it is made possible to adjust the actual backlight range for each XDi unit.

By using this feature, it is possible to make all XDi units located next to each other appear to have equal backlight level, even if it is a new service unit in an old installation.

This feature may also be used to adapt the XDi backlight level to other manufacturers' displays in the actual application.

4.7 XDi connections

XDi connectors			
Pin no.	**Marking**	**Function**	**Notes**
1	CAN1GND	CAN1 Common	Separate 5-pole connector (1)
2	CAN1 LOW	CAN1 Data low	
3	CAN1 HIGH	CAN1 Data high	
4	+24 V DC	+Power supply 1	
5	0 V	-Power supply 1	
S1	CAN1 term.	120 Ω termination, CAN1	Normally OFF
S2	CAN2 term.	120 Ω termination, CAN2	
6	CAN2 GND	CAN1 Common	Separate 5-pole connector (2)
7	CAN2 LOW	CAN1 Data low	
8	CAN2 HIGH	CAN1 Data high	
9	+24 V DC	+Power supply 2	
10	0 V	-Power supply 2	

NOTE Important: The common wire must **NOT** be connected to cable shield. The cable shield should be connected to a good ground connection in only one point!

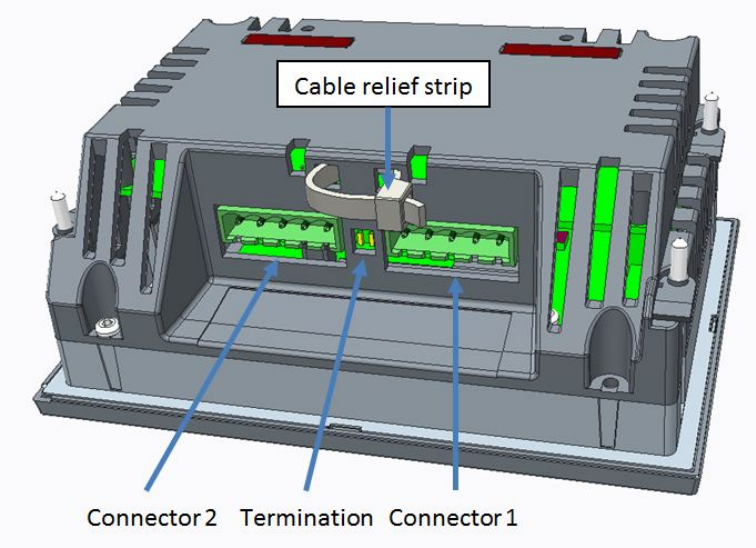

4.7.1 AX1 Analogue extension module connections

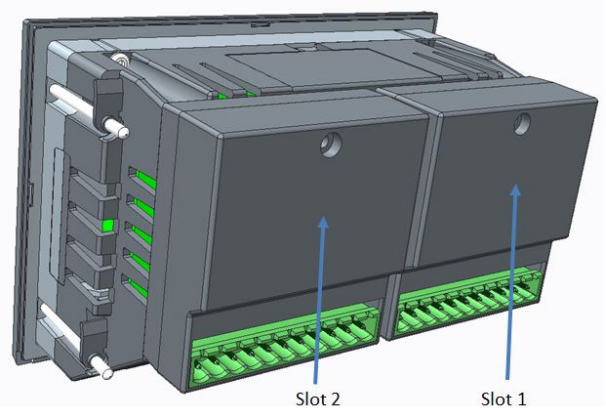

XDi with extension modules mounted

AX1 analogue extension module connector			
Pin no.	**Marking**	**Function**	**Remark**
1	AGND	Analogue GND (REF, DIMM, HV1+, HV2+)	
2	DIMM/HV3+	Dimmer input/voltage input	Return to PIN1
3	REF	Reference voltage output	Return to PIN1
4	HI2-	Return, current input 2, high	Note: Separate returns for high and low!
5	HI2+/LIV2+	+voltage/current input 2, high-low	
6	LIV2-	Return, current/voltage input 2, low	
7	HV2+	+voltage input 2, high	Return to PIN1
8	HI1-	Return, current input 1, high	Note: Separate returns for high and low!
9	HI1+/LIV1+	+voltage/current input 1, high-low	
10	LIV1-	Return, current/voltage input 1, low	
11	HV1+	+voltage input 1, high	Return to PIN1

NOTE Only one measurement (voltage or current) range from each analogue input can be selected.

4.7.2 DX1 Digital extension module connections

DX1 Digital extension module connector		
Pin no.	**Marking**	**Function**
1	OUT2 COM	Relay 2 contact, common
2	OUT2 N.C.	Relay 2 contact, normally closed
3	OUT2 N.O.	Relay 2 contact, normally open
4	OUT1 COM	Relay 1 contact, common
5	OUT1 N.C.	Relay 1 contact, normally closed
6	OUT1 N.O.	Relay 1 contact, normally open
7	IN2 LOW	Digital input 2, negative (-)
8	IN2 HIGH	Digital input 2, positive (+)
9	NOT CONN.	Terminal not used!
10	IN1 LOW	Digital input 1, negative (-)
11	IN1 HIGH	Digital input 2, positive (+)

4.7.3 NX1 NMEA output module connections

Serial extension module NX 1 & 2			
Term no.	**Signal**	**NX1 label**	**Notes**
1	No signal	Don't use	Do not connect anything! It may harm the module.
2		Don't use	
3	No signal	Don't use	
4		Don't use	
5	Contact input 1	C-IN 1	Push-button input 1 with internal pull-up to +5 V
6	Contact input 2	C-IN 2	Push-button input 2 with internal pull-up to +5 V
7	COM 1 output NMEA0183	TX1 - A	RS-422 differential output (IEC 61162-1)
8		TX1 - B	
9	Common GND	COMMON	See note*
10	No signal	Don't use	Do not connect anything! It may harm the module.
11		Don't use	

NOTE * Common (reference GND) for TX1 (RS-422 output). It is also the return for push-button contacts on C-IN1 and C-IN2.

NOTICE

Cable shield connection

The common wire must not be connected to the cable shield. The cable shield should be connected to a good ground connection in only one point!

4.7.4 NX2 NMEA input/output module connections

Serial extension module NX1 and 2			
Term. no.	**Signal**	**NX1 label**	**Notes**
1	COM 3 input NMEA0183	RX3 - B	Opto-insulated serial input RS-422 (IEC 61162-1)
2		RX3 - A	
3	COM 1 input NMEA0183	RX1 - B	Opto-insulated serial input RS-422 (IEC 61162-1)
4		RX1 - A	
5	Contact input 1	C-IN 1	Push-button input 1 with internal pull-up to +5 V
6	Contact input 2	C-IN 2	Push-button input 1 with internal pull-up to +5 V
7	COM 1 output NMEA0183	TX1 - A	RS-422 differential output (IEC 61162-1)
8		TX1 - B	
9	Common GND	COMMON	Note 1
10	COM 2 in/out NMEA0183	RX/TX2 - B	RS-485 configured as input or output. This line is internally terminated with 120 Ω (switchable).
11		RX/TX2 - A	

NOTE 1: Common (Ref. GND) for TX2/TX2 (RS-485 differential), TX1 (RS-422 differential output) and return connection for push-button contacts connected to C-IN1 and C-IN2 (contact inputs).

NOTICE

Cable shield connection

The common wire must NOT be connected to the cable shield. The cable shield should be connected to a good ground connection in only one point!

4.7.5 USB service port

A mini-USB connector is placed on the top side of the XDi housing and is only for upload of new software or library upload.

If a PC or laptop is connected to this port during power up, the XDi will not start normal operation and the display will be black. Disconnect power supply and the USB cable and power-up the unit again, and it will now start and operate normally again.

4.8 Unit dimensions

XDi type	Panel cut-out	Front size	Display size	Needed depth behind panel:	
				Without extension module	**With extension module (incl. wiring)**
XDi 96	92 x 92 mm 92: (0-0.0/+0.8 mm)	102 x 102 mm (equal to XL96) w/IP66 gasket: 102.8 x 102.8 mm	70.1 x 52.6 mm (320 x 240 pixels)	More than 56 mm	More than 91 mm Recommended more than 105 mm
XDi 144	138 x 92 mm 138: (-0.0/+1.0 mm) 92: (-0.0/+0.8 mm)	148 x 102 mm (wide as XL144) w/IP66 gasket: 148.8 x 102.8 mm	108 x 64.8 mm (800 x 480 pixels)	More than 56 mm	More than 91 mm Recommended more than 105 mm
XDi 192	186 x 138 mm 186: (-0.0/+1.1 mm)	196 x 148 mm (wide as XL192)	152.4 x 91.5 mm (800 x 480 pixels)	More than 61 mm	More than 94 mm

	138: (-0.0/+1.0 mm)	w/IP66 gasket: 196.8 x 148.8 mm			Recommended more than 105 mm

Height above panel i 6.0 mm for all Standard XDi versions and 9.0 mm for XDi with IP66 gasket.

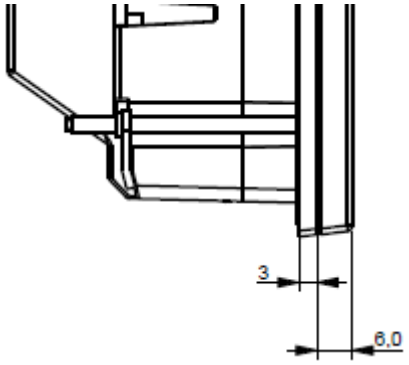

Front frame is 6.0 mm, and the IP66 gasket adds 3 mm to the height.

4.8.1 XDi 96

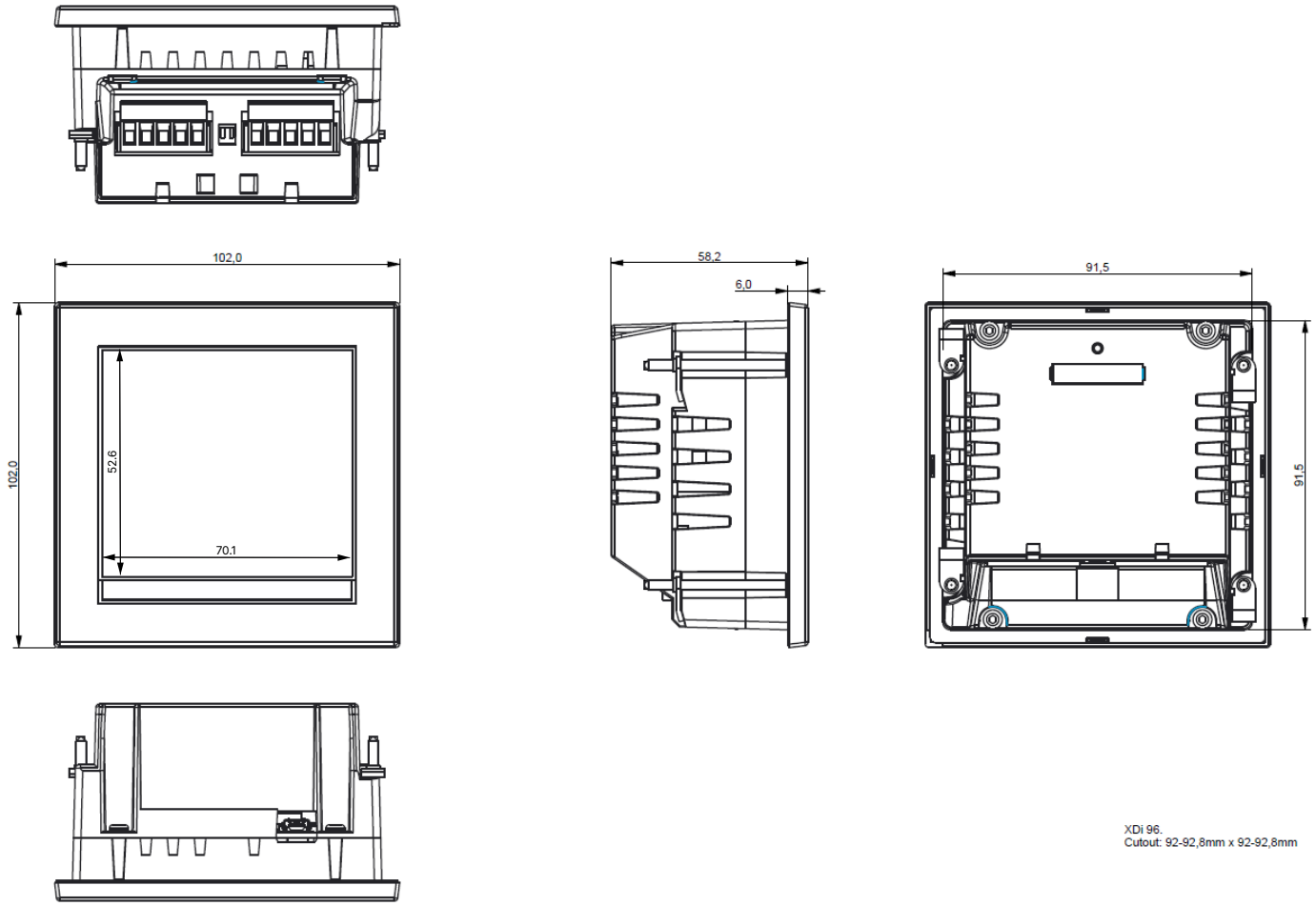

Dimensions in mm

4.8.2 XDi 96 + module

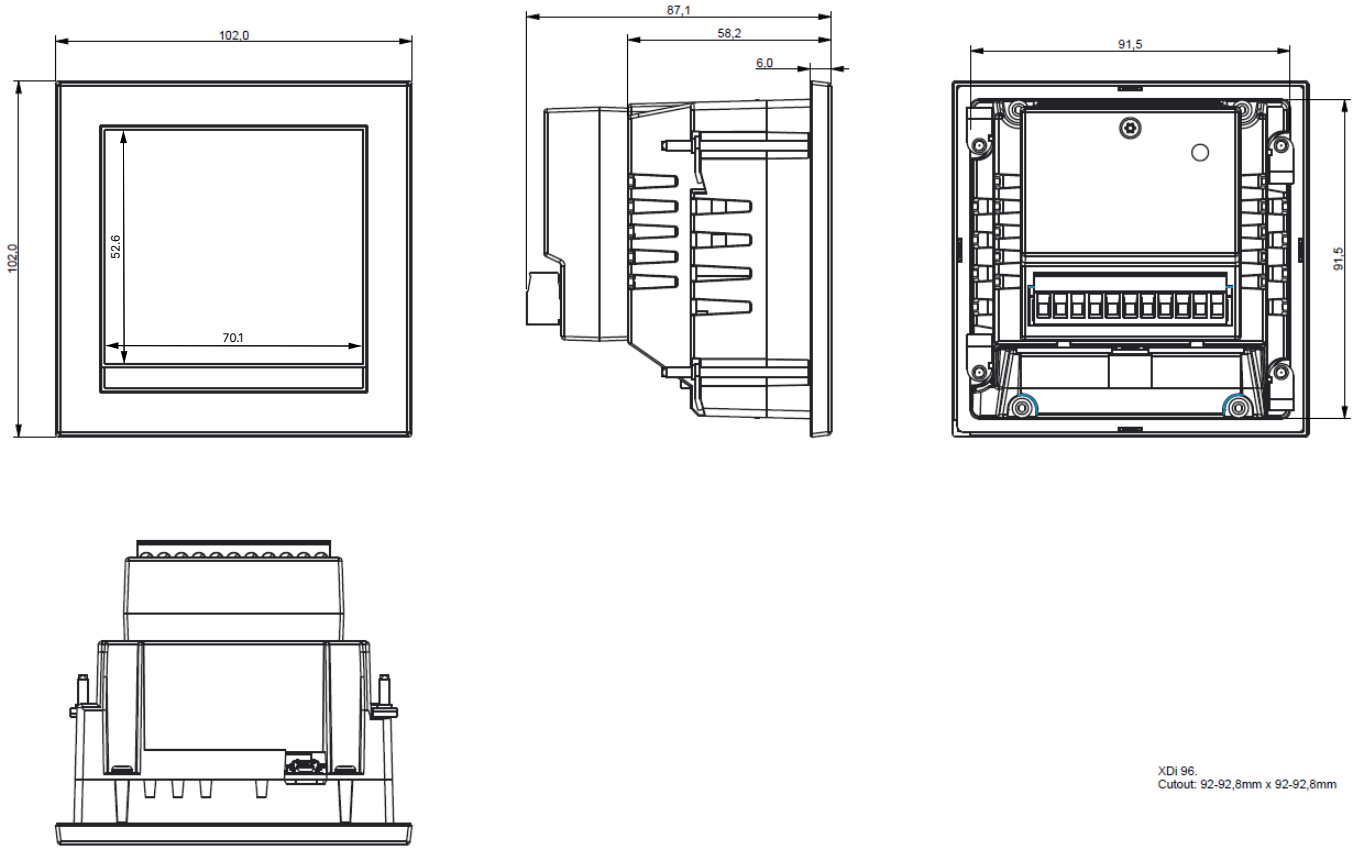

4.8.3 XDi 144

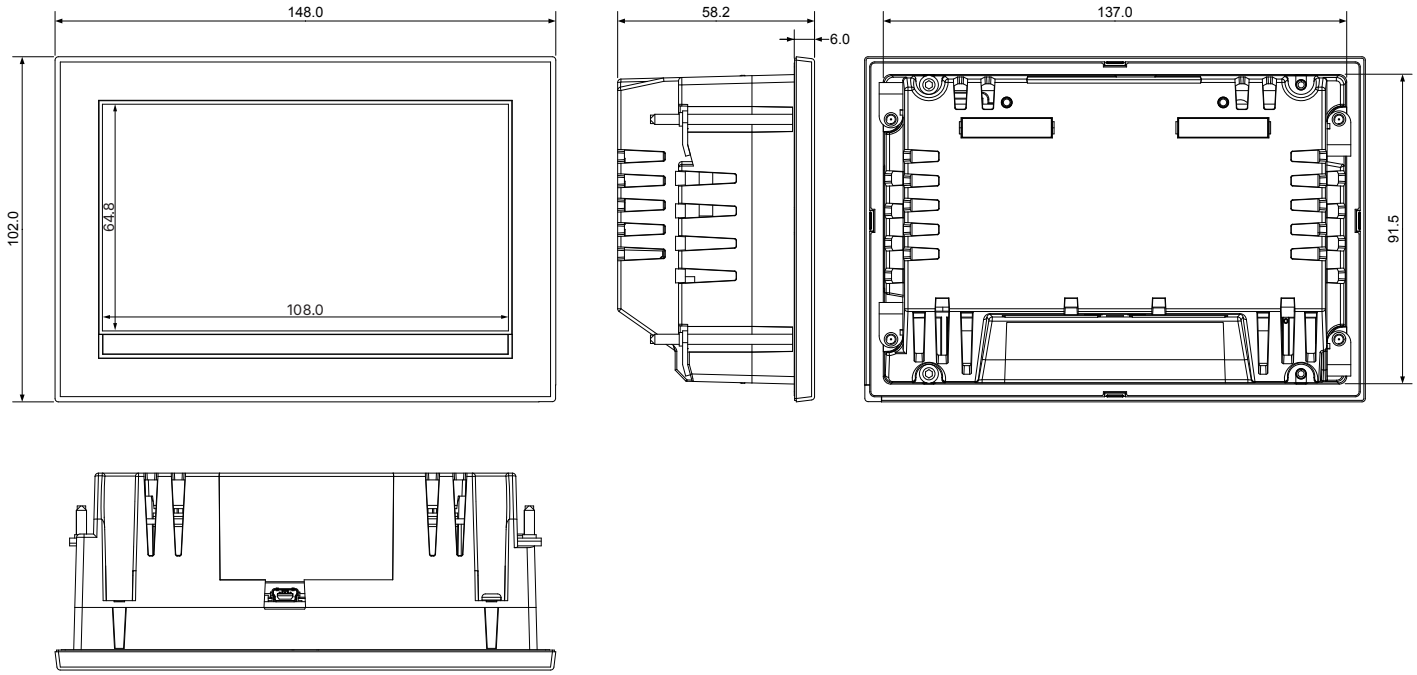

Dimensions in mm

4.8.4 XDi 144 + module

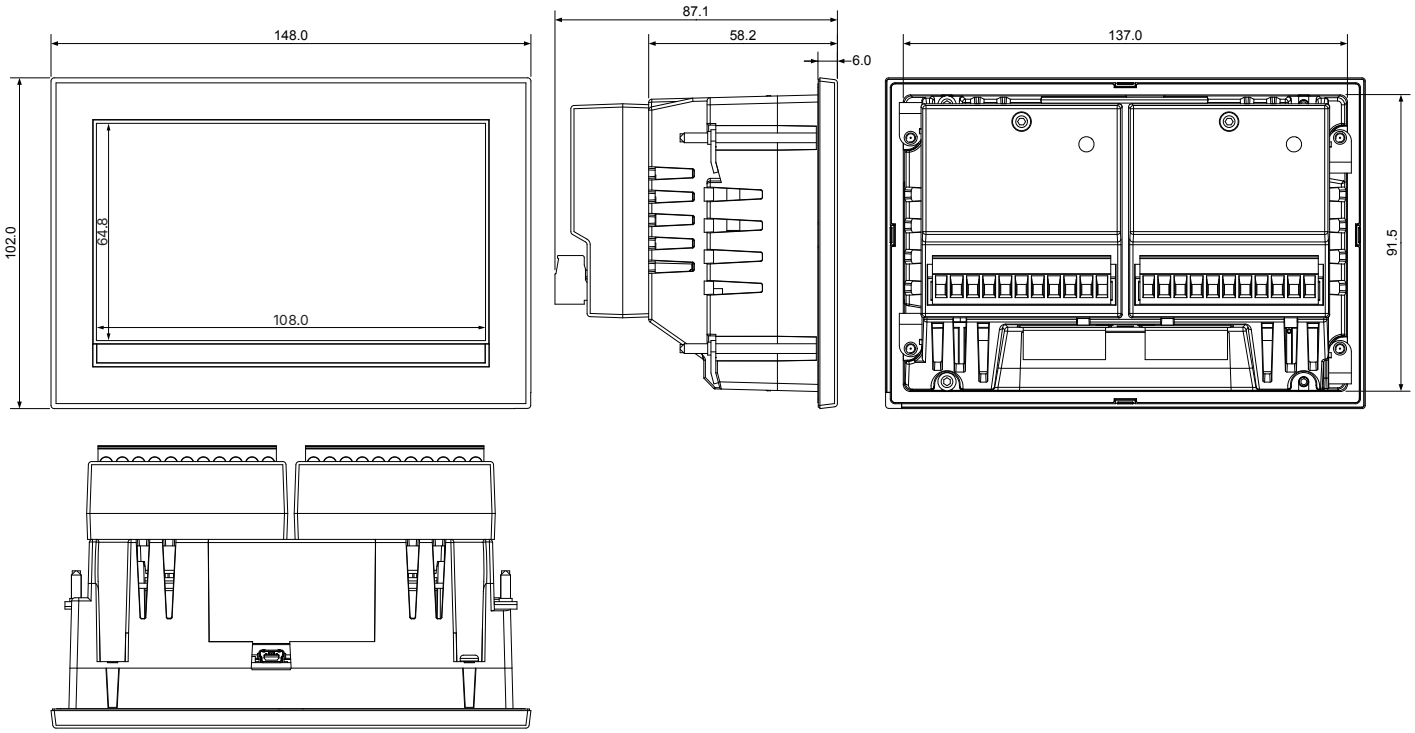

Dimensions in mm

4.8.5 XDi 192

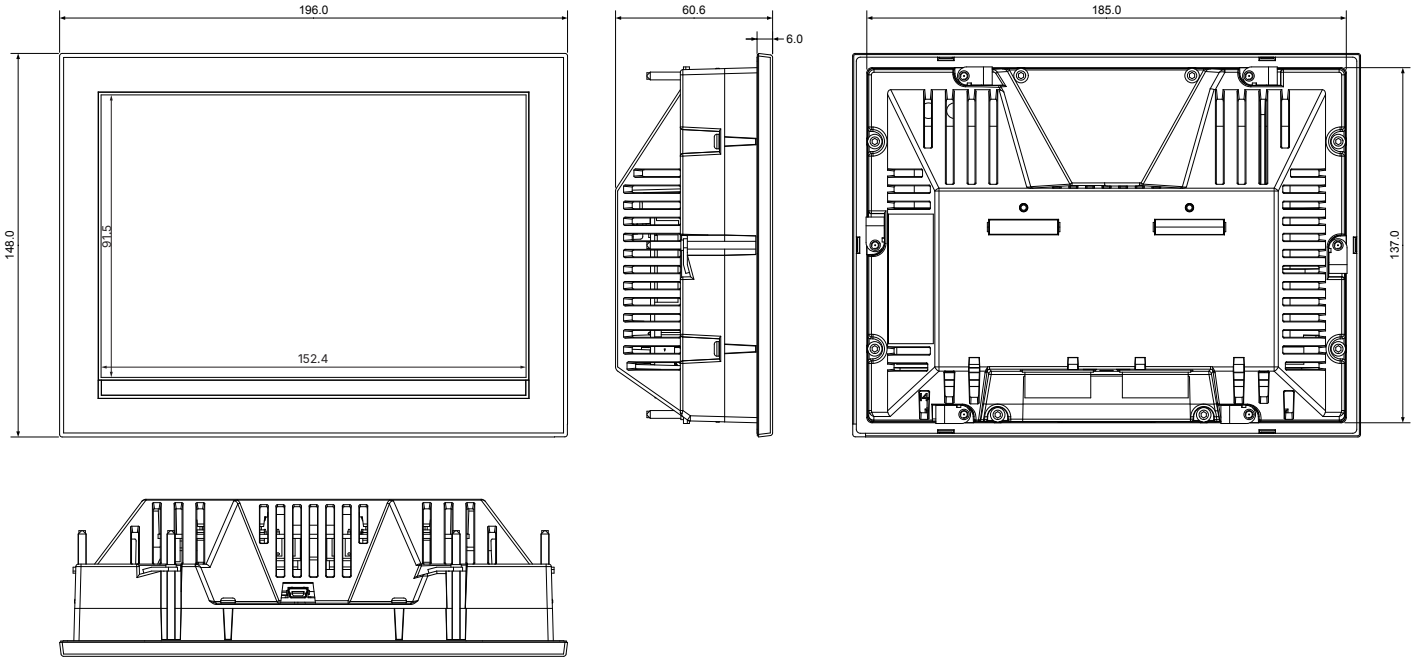

Dimensions in mm

4.8.6 XDi 192 + module

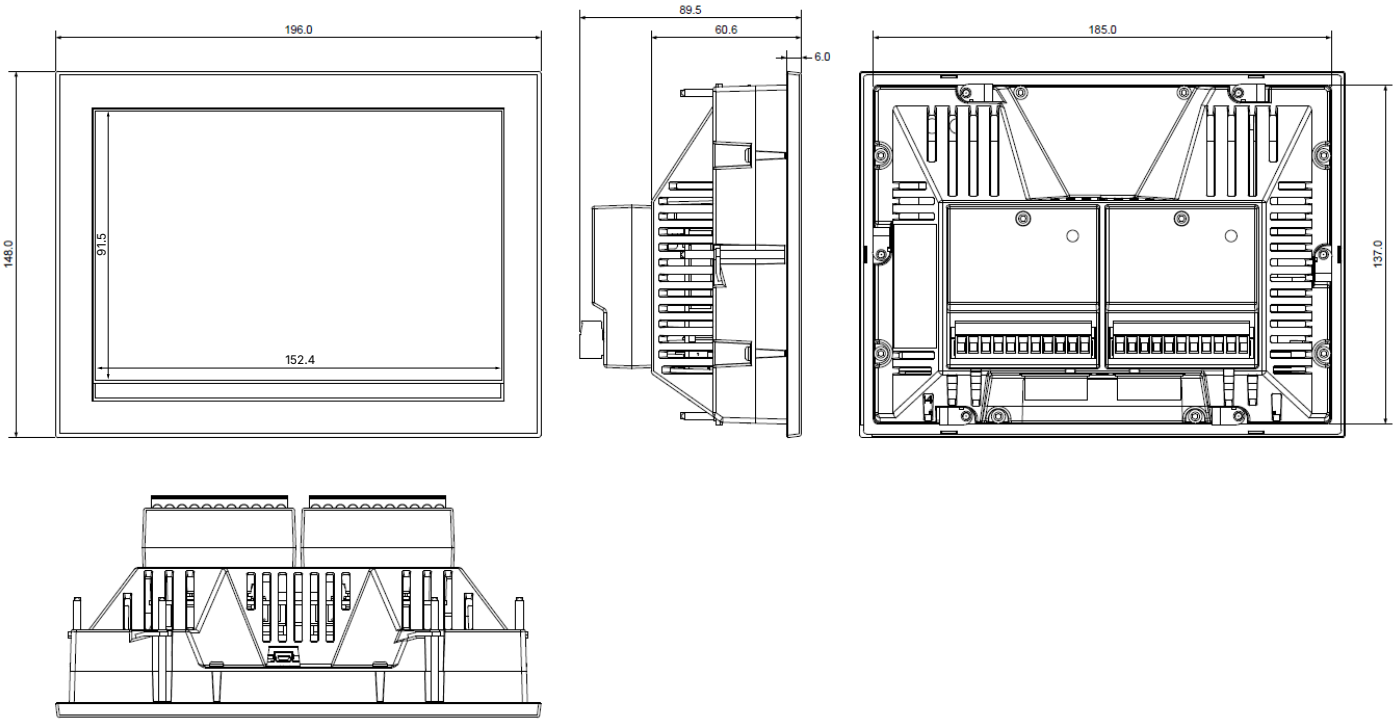

Dimension in mm

4.9 Product label

Example:

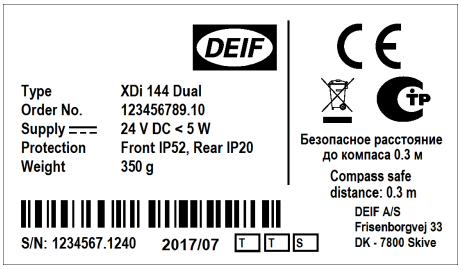

4.9.1 Warranty label

The XDi unit is protected from unauthorised opening or repair by a warranty label. If this label is broken or removed, the warranty will be lost!

4.10 Warranty conditions

Warranty conditions are part of the DEIF Terms and Conditions of Sales and Delivery and are reflecting the local legislation in the region where the products are sold. However, DEIF A/S shall in no event be liable for any defects or non-compliance in any of the products sold, more than two years after delivery.

5. Ordering information

5.1 Standard variants

XDi Dual and Multi variants

Type	Variant no.	Description	Item no.
XDi 96 D	02	XDi 96 D - Dual display indicator with CAN bus.	2951260020-02
XDi 96 M	03	XDi 96 M - Multi display indicator with CAN bus.	2951260020-03
XDi 144 D	02	XDi 144 D - Dual display indicator with CAN bus.	2951260030-02
XDi 144 M	03	XDi 144 M - Multi display indicator with CAN bus.	2951260030-03
XDi 192 D	02	XDi 192 D - Dual display indicator with CAN bus.	2951260040-02
XDi 192 M	03	XDi 192 M - Multi display indicator with CAN bus.	2951260040-03

XDi Navigation variants

Type	Variant no.	Description	Item no.
XDi 96 N	01	XDi 96 N - Navigation display indicator w/CAN bus. NMEA com. requires an NX2 extension module.	2951270020-01
XDi 144 N	01	XDi 144 N - Navigation display indicator w/CAN bus. NMEA com. requires an NX2 extension module.	2951270030-01
XDi 192 N	01	XDi 192 N - Navigation display indicator w/CAN bus. NMEA com. requires an NX2 extension module.	2951270040-01

NOTE IMPORTANT: Please note that all XDi variants must be ordered with a standard or customised library.

5.2 Available options

Options for XDi-D/M performance class Dual and Multi

Option	Description	Type	Note
2 pcs 5-pole plug w/ double screw terminals	CAN/Power pluggable connector block with double screw terminals For easy daisy chaining	Option	Replaces standard single screw terminal blocks
2 pcs 5-pole plug w/ double spring terminals	CAN/Power pluggable connector block with double spring terminals For easy daisy chaining	Option	Replaces standard single screw terminal blocks
IP66 front	Factory-mounted IP66 front option	Option	This option cannot be retrofitted after delivery.
AX1 analogue extension module	Analogue extension module for mounting in slot 1 or slot 2	Option	Option module is delivered with the XDi. It can also be ordered as an accessory.
DX1 digital extension module	Digital extension module for mounting in slot 1 or slot 2	Option	Option module is delivered with the XDi. It can also be ordered as an accessory.
NX1 NMEA output extension module	NMEA extension module for mounting in slot 2	Option	Option module is delivered with the XDi. It can also be ordered as an accessory.

Options for XDi-N performance class navigation

Option	Description	Type	Note
2 pcs 5-pole plug w/ double screw terminals	CAN/Power pluggable connector block with double screw terminals	Option	CAN connectors. Replace standard single screw terminal blocks.

Option	Description	Type	Note
	For easy daisy chaining		
2 pcs 5-pole plug w/ double spring terminals	CAN/Power pluggable connector block with double spring terminals For easy daisy chaining	Option	CAN connectors. Replace standard single screw terminal blocks.
IP66 front	Factory-mounted IP66 front option	Option	Factory-mounted IP66 front This option cannot be retrofitted after delivery.
Front frame XDi 96	Standard front frame for XDi 96 without push-buttons	Option	Replaces front frame with push-buttons
Front frame XDi 144	Standard front frame for XDi 144 without push-buttons	Option	Replaces front frame with push-buttons
Front frame XDi 192	Standard front frame for XDi 192 without push-buttons	Option	Replaces front frame with push-buttons
AX1 analogue extension module	Analogue input module for mounting in slot 1 or slot 2	Option	Option module is delivered with the XDi. It can also be ordered as an accessory.
DX1 digital extension module	Digital input and relay module for mounting in slot 1 or slot 2	Option	Option module is delivered with the XDi. It can also be ordered as an accessory.
NX1 NMEA output extension module	NMEA output module for mounting in slot 2	Option	Option module is delivered with the XDi. It can also be ordered as an accessory.
NX2 NMEA com extension module	NMEA input and output module for mounting in slot 1 or slot 2	Option	Option module is delivered with the XDi. It can also be ordered as an accessory.

5.3 XDi accessories 2951260090

Variant	Accessory	Description	Type	Note
10	1022210205	2 pcs 5-pole plug w/single screw terminals	Accessory	Contains 2 terminal blocks
08	1022212905	2 pcs 5-pole plug w/double screw terminals	Accessory	Contains 2 terminal blocks Used for easy daisy chaining
09	1022213005	2 pcs 5-pole plug w/double spring terminals	Accessory	Contains 2 terminal blocks Used for easy daisy chaining
11	1100610061	Standard front frame for XDi 96 without push-buttons	Accessory	Can be used for logo branding of XDi
12	1100610055	Standard front frame for XDi 144 without push-buttons	Accessory	Can be used for logo branding of XDi
13	1100610058	Standard front frame for XDi 192 without push-buttons	Accessory	Can be used for logo branding of XDi
14	2232700012	XDi 96 Front frame kit with 4 buttons	Accessory	Used for XDi-D/M front button dimmer function *
15	2232700013	XDi 144 Front frame kit with 4 buttons	Accessory	Used for XDi-D/M front button dimmer function *
16	2232700014	XDi 192 Front frame kit with 4 buttons	Accessory	Used for XDi-D/M front button dimmer function *
05	2031500004	AX1 analogue extension module	Accessory	Analogue input module for mounting in slot 1 or slot 2 **

Variant	Accessory	Description	Type	Note
06	2031500005	DX1 digital extension module	Accessory	Digital input and relay module for mounting in slot 1 or slot 2 **
07	2031500007	NX1 NMEA output extension module	Accessory	NMEA output module for mounting in slot 2 **
17	2031500008	NX2 NMEA com extension module	Accessory	NMEA input and output module for mounting in slot 1 or slot 2 **

* Requires that the XDi has a virtual indicator library installed that supports push-button dimmer.

** Requires that the XDi has a virtual indicator library installed that supports the module.

5.4 Order specifications

5.4.1 Product variants

Mandatory information				Optional	Additional options to a standard variant			
Item no.	Vari-ant no.	Type	Library no.	Library owner no.*)	Option 1	Option 2	Option 3	Option 4

*) DEIF standard libraries have library owner number 000001. If it is a custom library, the owner number should already be registered in our system. If for example you are a panel builder and you handle custom libraries from different customers, it is important to include the library owner number!

A library is identified by:

Product type:	XDi 192 D	Product size and performance class.
Library owner*:	0000001	(= DEIF standard) or it can be a customer's library owner number.
Library number:	021	An owner can have up to 999 libraries.

5.4.2 Example

Mandatory information				Optional	Additional options to a standard variant			
Item no.	Variant no.	Type	Library no.	Library owner no.*)	Option 1	Option 2	Option 3	Option 4
2951260040-02	02	XDi 192 D	021	DEIF standard	Plug w/ double screw term.	AX 1	DX1	IP66

XDi 192 Dual indicator with DEIF standard library number 021 that is “Main propulsion indicators”.

The unit is also ordered with 5 pole plugs with double spring terminals for easy daisy-chaining of the CAN bus and the supply voltage. The XDi application requires analogue pitch input, so an AX1 module is ordered as option, and the RPM input comes from and inductive pickup, so a DX1 module is also ordered. This XDi unit is located in the engine room, and IP66 protection is ordered.

5.4.3 Disclaimer

DEIF A/S reserves the right to change any of the contents of this document without prior notice.

The English version of this document always contains the most recent and up-to-date information about the product. DEIF does not take responsibility for the accuracy of translations, and translations might not be updated at the same time as the English document. If there is a discrepancy, the English version prevails.